Agency: Commerce, Community and Economic Development

Grants to Named Recipients (AS 37.05.316)

Grant Recipient: Wrangell Cooperative Association **Federal Tax ID:** 92-6000144

Project Title: **Project Type:** New Construction and Land Acquisition

Wrangell Cooperative Association - Carving Facility

State Funding Requested: $515,000 **House District:** 33 / Q

One-Time Need

Brief Project Description:

Construction of a Carving Facility by the Wrangell Cooperative Association to be located next to the SNO Building and Wrangell Museum in downtown Wrangell

Funding Plan:

Total Project Cost:	$1,000,000
Funding Already Secured:	($485,000)
FY2015 State Funding Request:	($515,000)
Project Deficit:	$0

Funding Details:

Wrangell Cooperative Association has secured 485,000 toward this project through private foundations. The project has begun but lacks the funds for final completion.

Detailed Project Description and Justification:

The goal of this project is to construct a carving facility in downtown Wrangell. With the assistance of the Foraker Group, Wrangell Cooperative Association (WCA) developed a strategic plan. This plan describes how the tribe intends on generating revenue to maintain the recently completed Chief Shakes House and future tribal programs and projects, including this proposed new carving facility. The carving facility, in conjunction with the newly reconstructed and rededicated Chief Shakes Tribal House, will provide tourism and educational opportunities alike. These tribal assets will enhance a visitor's experience in the community and potentially drive more visitors to the community of Wrangell and generate more revenue for the tribe and the community as a whole. WCA has also applied for an ANA grant to operate the facility for two years while external revenue sources are developed.

Project Timeline:

Upon receipt of funds, completing construction of the carving facility would occur immediately.

Entity Responsible for the Ongoing Operation and Maintenance of this Project:

WCA

For use by Co-chair Staff Only:

$50,000 Approved

11:55 AM 5/13/2014

Contact Name: Becky Rooney
Contact Number: 465-4858

Grant Recipient Contact Information:

Name:	Ernie Christian
Title:	President
Address:	PO Box
	Wrangell, Alaska 99929
Phone Number:	(907)874-2222
Email:	

Has this project been through a public review process at the local level and is it a community priority? [X] Yes [ ] No

For use by Co-chair Staff Only:

11:55 AM 5/13/2014

Contact Name: Becky Rooney
Contact Number: 465-4858

Wrangell Cooperative Association

104 Lynch St. Wrangell, Alaska 99929
Mailing Address: P.O. Box 2021 Wrangell, AK 99929

Telephone: 907-874-4304
Fax: 907-874-4305
Email: wcatribe@gmail.com

Date: 10/9/12

Re: Capital Projects

Wrangell Borough Assembly
City and Borough of Wrangell
PO Box 531
Wrangell, Alaska 99929

Honorable Mayor and Members of the Assembly,

The Wrangell Cooperative Association would like to first thank you for your commitment to secure funding for the Chief Shake's House Restoration Project. Without the support of the Borough Assembly and city staff, we would not have been able to reach our fundraising goal.

Wrangell Cooperative Association would like to take this opportunity to articulate our long-term vision for cultural, social, and economic development for the tribe and the greater Wrangell community, and how the Chief Shake's House and the new carving facility contributes to this vision. **We would also like to request that the next Borough State Capital Project List include a final request of $500,000 to the State to complete the construction of a new carving facility to be located adjacent to the SNO Building in downtown Wrangell.**

The carving facility will cost approximately $1,000,000 to construct. We have secured approximately $485,000 to date for the new facility, and would like to request $500,000 from the State of Alaska. To strengthen our proposal, we respectfully request to be placed in the top ten capital projects for the City & Borough of Wrangell.

To give you an idea of how significant the restoration project has been in Wrangell, the project has raised and spent locally $877,000 creating 18 jobs. In addition, we anticipate 600-1,000 people visiting Wrangell in May 2013 for the rededication of Chief Shake's House, which will generate a significant amount of revenue for local businesses.

Some of the restoration project and carving shed funding includes:

- $150,000 - Sealaska timber (donated)
- $135,460 – Carving shed land (50 year lease for $1/year)
- $250,000 – State Appropriation
- $500,000 – State Appropriation

- $222,000 – Murdock Charitable Trust (Shakes Island)
- $100,000 – Paul Allen Foundation (new carving shed)-pending
- $450,000 – Rasmuson Foundation - Shakes Island, Carving Shed and Project Development

With the assistance of Dennis McMillan, CEO of Foraker Group, the tribe developed a strategic plan. This plan describes how the tribe intends on generating revenue to maintain Chief Shake's House and future tribal programs and projects, including the new carving facility. The tribe intends on operating its own Chief Shake's tour operation in conjunction with tourism and education opportunities at the new carving facility. We believe these tribal assets will drive more visitors to Wrangell and generate more revenue for the tribe and the greater community. The tribe is applying for an ANA grant to operate the carving facility for two years while external revenue sources are developed.

We believe these projects are important for the cultural, social, and economic future of the tribe and the community of Wrangell. Coupled with our new front street, revitalization of the SNO Building, and all the other efforts around our community to make Wrangell a more beautiful place to live and visit, we believe our collective investment in the restoration of Chief Shake's House and the construction of the new tribal carving facility will contribute significantly to the growth of Wrangell.

Sincerely,

Ernie Christian
President

HANDI CAP excess BATHROOMS Men's And Women

WRANGELL CARVING SHED

FOR

Wrangell Cooperative Association and Alaska Native Sisterhood

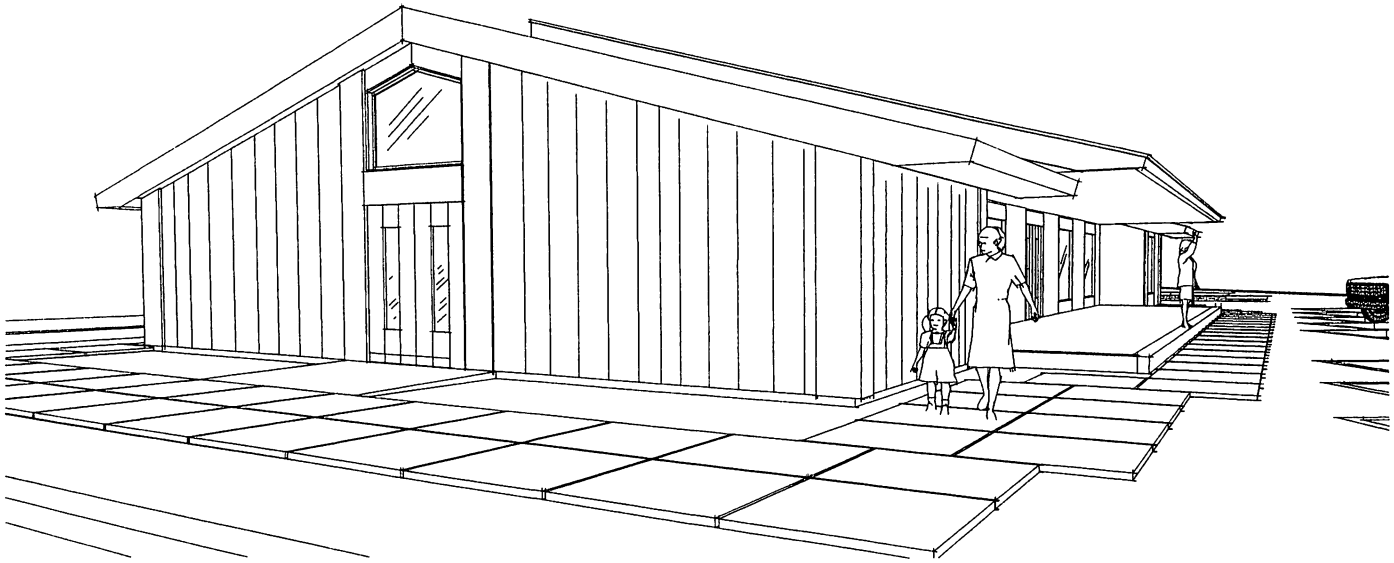

MRV Architects Sept 10, 2012

WCA
WRANGELL, ALASKA

Bathroom

ABBREVIATIONS

A.B.	ANCHOR BOLT
A.C.	ASPHALTIC CONCRETE
A.C.	AIR CONDITIONING
ACST	ACOUSTICAL
AFF, A.F.F.	ABOVE FINISHED FLOOR
ALUM.	ALUMINUM
ARCH.	ARCHITECTURAL
BD.	BOARD
BET.	BETWEEN
BLDG.	BUILDING
BLK.	BLOCK
BLKG	BLOCKING
BM.	BEAM
B.O.S	BOTTOM OF STEEL
BOT.	BOTTOM
CEM	CEMENT
℄	CENTER LINE
CLG.	CEILING
CLR	CLEAR
COL.	COLUMN
C.M.U.	CONCRETE MASONRY UNIT
CONC	CONCRETE
CONN	CONNECTION
CONST	CONSTRUCTION
CONT	CONTINUOUS
C.O.T.R.	CONTRACTING OFFICER TECH REP
DET	DETAIL
D.F	DRINKING FOUNTAIN
DIA.	DIAMETER
DIAG	DIAGONAL
DIM.	DIMENSION
DN.	DOWN
DR.	DOOR
D.S.	DOWN SPOUT
DWG.	DRAWING
E	EAST
EA.	EACH
EL.	ELEVATION
ELECT	ELECTRICAL
ELEV	ELEVATOR OR ELEVATION
EQ	EQUAL
EQUIP	EQUIPMENT
(E), EXIST.	EXISTING
EXP.	EXPANSION
F.D	FLOOR DRAIN
F.F	FINISH FLOOR
FHC.	FIRE HOSE CABINET
FIN	FINISH
FIX	FIXTURE
FLR.	FLOOR
F.O.C	FACE OF CONCRETE
F.O.M	FACE OF MASONRY
F.O.S	FACE OF STUD/STEEL
F.S.	FLOOR SINK
FT.	FOOT/FEET
FTG.	FOOTING
GA	GAUGE
GALV	GALVANIZED
GRD	GROUND
GWB	GYPSUM
HDW	HARDWARE
HGT	HEIGHT
HORIZ	HORIZONTAL
I.D	INSIDE DIAMETER
IN.	INCH
JT	JOINT
LB	POUND
MACH	MACHINE
MATL	MATERIAL
MAX	MAXIMUM
M.B	MACHINE BOLT
MECH.	MECHANICAL
MTL.	METAL
MFR.	MANUFACTURER
MIN	MINIMUM
MISC.	MISCELLANEOUS
(N)	NEW
N.	NORTH
N.I.C	NOT IN CONTRACT
N.T.S.	NOT TO SCALE
NO	NUMBER
NOM	NOMINAL
O/	OVER
O.C	ON CENTER
O.D	OUTSIDE DIAMETER
OPG	OPENING
OPP	OPPOSITE
PL	PLATE
PR.	PAIR
PSF	POUNDS PER SQUARE FOOT
PSI	POUNDS PER SQUARE INCH
	RISER
RAD	RADIUS
R.D	ROOF DRAIN
REF	REFERENCE
REINF	REINFORCED
REQD	REQUIRED
RM	ROOM
R.O	ROUGH OPENING
	SOUTH
SECT	SECTION
SHT	SHEET
SIM.	SIMILAR
SPEC.	SPECIFICATION
SQ.	SQUARE
S/S	SERVICE SINK
S.S.	STAINLESS STEEL
STL	STEEL
STRUCT	STRUCTURAL
	TREAD
T.C.	TOP OF CURB
TEL	TELEPHONE
THK	THICKNESS
T.O.C.	TOP OF CONCRETE
T.O.S	TOP OF STEEL
TYP	TYPICAL
U.N.O	UNLESS NOTED OTHERWISE
V.A.	VETERANS ADMINISTRATION
VERT	VERTICAL
W.	WEST
W/	WITH
W/O	WITHOUT
W.C.	WATER CLOSET
WD	WOOD
WDW.	WINDOW
WT	WEIGHT
W.W.F	WELDED WIRE FABRIC

CODE STUDY

OCCUPANCY (SEC. 303.1; SEC 310):
B, F-1, S-1, (Full facility evaluated as F-1)

OCCUPANCY CLASSIFICATIONS: Most of the floor is classified as F-1 Factory Industrial F-1 (306.1).
Type S-1 Moderate Hazard Storage and B office areas

CONSTRUCTION TYPE: V-B Fully sprinklered

AUTOMATIC SPRINKLER SYSTEM: (SEC. 903.3.1.1)
The area limitations on Table 503 is permitted to be increased by an additional 200 percent (1s = 200 percent) for two story buildings

FIRE RESIST. OF EXTERIOR WALLS: (TABLE 602) (TYPE V-B)
A = 0-1 HOUR 10 TO 30 FT. FROM PROPERTY LINE

EXTERIOR WALL OPENINGS (TABLE 704.8) (UNSPRINKLERED PER 704.8.1) There is no limit for unprotected exterior wall openings where the fire separation is greater than 30 feet

BUILDING ELEMENTS: Per Table 601 allows that Type V B building to be unrated.

EXTERIOR WALL: Table 602 allows the exterior walls of type VB construction and Occupancy Group F-1, S-1, B with fire separation distance equal or greater than 10 feet to be non rated. All walls for the Carving Shed are more than 10' from any property line

ALLOWABLE HEIGHT & STORIES / ALLOWABLE AREA PER FLOOR: (V-B) (F-1) (S-1) (B) (TABLE 503)

F-1	S-1	B:
HEIGHT = 40 FEET	HEIGHT = 40 FEET	HEIGHT = 40 FEET
STORIES = 1 STORY / 8,500 SF	STORIES = 1 STORY / 9,500 SF	STORIES = 2 STORY / 9,000 SF

ACTUAL HEIGHT: 20'-0" FEET TO RIDGE
ACTUAL STORIES: 1

ALLOWABLE AREA PER FLOOR: (V-B) (F-1) (TABLE 503)
F-1 = 8,500 SF PER FLOOR

ACTUAL FLOOR AREA:

Carving Area (F-1)	= 1,200 SF	(BLDG. COMPLIES)
Office / Training Room (B)	= 590 SF	(BLDG. COMPLIES)
Totem Display Area (S-1)	= 1,165 SF	(BLDG. COMPLIES)

Total Building Area = 3,894 SF

OCCUPANT LOAD: (TABLE 1004.1.1)

Carving Area	= 1,200 SF	@ 100 SF / occ	12
Office / Training Room	= 590 SF	@ 50 SF / occ	12
Totem Storage	= 1,165 SF	@ 500 SF / occ	2
		Total	26 occupants

MINIMUM EGRESS WIDTH:
SEC. 1005.1: all means of egress width shall be sized to .2" per occupant, and other egress components, including doors at .15" per occupants.
Multiple means of egress have been sized such that the loss of any means of egress shall not reduce the available capacity to less than 50 percent of the require capacity

Travel Distance Limitations: Exits are located on each end such that the maximum length of exit access travel does not exceed 250' per table 1061.1

Number of Exits: Per Section 1019, the following exits are required from rooms and levels
Door widths are calculated per 1005.1 requirements above.

Main Floor	width required: 26 x .2" = 62"	
	provided four exits = 252" total	

Minimum Number of Required Plumbing Fixtures

Water Closets	1 per 100 occupants (26 actual)	provided 2
Lavatories	1 per 100 occupants (26 actual)	provided 2
Drinking Fountains	1 per 400 occupants (26 actual)	provided 1

TABLE OF CONTENTS

GENERAL INFORMATION

Wrangell Cooperative Association,
P.O. Box 868, Wrangell,
Alaska 99929
(907) 874-3481

ARCHITECTURAL

MRV ARCHITECTS
1420 GLACIER AVENUE
SUITE #101
JUNEAU, ALASKA 99801
907-586-1371 FAX: 907-463-5544
Project Manager: VLAD IRIMESCU
E-MAIL: vlad@mrvarchitects.com

G000 COVER SHEET
G001 TABLE OF CONTENTS, ABBREVIATIONS, CODE STUDY, WINDOWS, DOORS SCHEDULES
G002 SPECIFICATIONS, NOTES
A100 SITE PLAN
A101 NEW SITE PLAN
A200 FLOOR PLAN
A201 ROOF FRAMING PLAN
A300 BUILDING SECTIONS
A301 BUILDING SECTIONS
A302 BUILDING SECTIONS
A400 BUILDING ELEVATIONS
A401 BUILDING ELEVATIONS
A700 BUILDING DETAILS
A701 DETAILS
A702 DETAILS
A703 DETAILS

STRUCTURAL ENGINEER

BBFM Engineers, Inc.
ANCHORAGE
907-274-2236
MANAGER: Will Nelson

S001 GENERAL NOTES
S101 FOUNDATION PLAN
S102 ROOF PLAN
S501 FOUNDATION DETAILS
S510 FRAMING DETAILS
S511 FRAMING DETAILS

ELECTRICAL ENGINEERS

GORMAN ENGINEERS
PAT GORMAN
907-463-6721
E-MAIL: pgorman@gci.com

E100 LEGEND, NOTES, SINGLE LINE DIAGRAM
E200 POWER AND HEATING PLAN
E300 LIGHTING PLAN
E400 SIGNAL PLAN
E500 HEATING PLAN
E600 SCHEDULES, MEZZANINE PLAN

MECHANICAL ENGINEER

MURRAY & ASSOCIATES
P.O. BOX 21081
JUNEAU, AK 99802
907-780-6151 FAX: 907-780-6182
MANAGER: DOUG MURRAY
E-MAIL: dougm@murrarypc.com

M001 SYMBOLS & SCHEDULES
M101 FOUNDATION
M201 FLOOR PLAN
M202 ENLARGED PLANS
M300 PLUMBING DIAGRAM
M301 DETAILS

DRAWING LEGEND

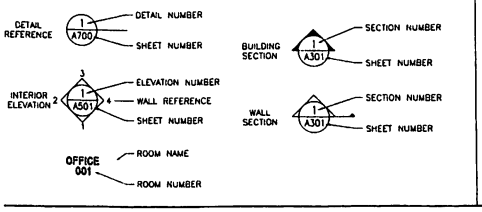

DOOR TYPES, FRAMES

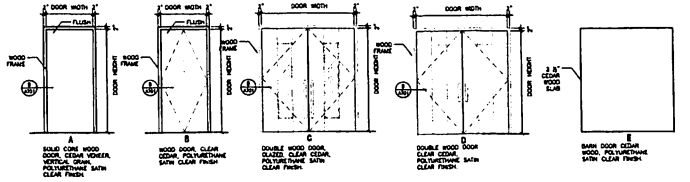

WINDOWS TYPES, FRAMES

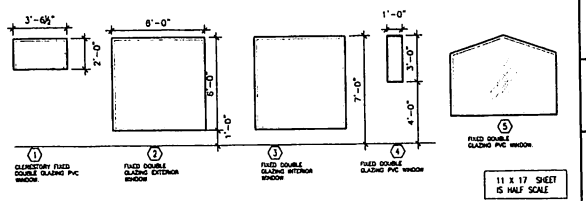

11 X 17 SHEET
IS HALF SCALE

STATE OF ALASKA
49TH
PAUL VOELKERS
No. 8638-A
REGISTERED ARCHITECT

MRV ARCHI
1420 GLACIER A
JUNEAU, AK
907-586-1
FAX 907-46.
mrv@mrvarchi

WRANGELL CARVING SHED

Wrangell Cooperative Association and Alaska Native Sisterhood

SHEET TITLE:
ABBREVIAT
CODE STU

DATE: JANUAR
SCALE:
DRAWN:
CHECKED:

SHEET NO.
G0

ARCHITECTURAL NOTES

GENERAL
Reference structural drawings for building structure details and other features not indicated. Coordinate all work with other trades as may be required.

CAST-IN-PLACE CONCRETE

All concrete materials and related construction shall conform to the structural drawings contained in this set and shall be in accordance with Section 501 of the Standard Specifications and Special Provisions

FOUNDATION DRAINAGE

Subsurface drainage materials shall consist of a nylon or recycled polypropylene core covered with a permeable geotextile on one side to provide a free draining surface suitable for direct bury against footing and stem walls as where noted on the Plans. Furnish and Install Enkadrain 9120 or 3611R products as manufactured by Colbond Inc., PO Box 1057, 1301 Sand Hill Rd. Enka, NC 28728, Tel. (800) 365-7391 or similar approved equal.

Install and backfill in accordance with the manufacturers recommendations.

INSULATION

Foil-faced polyisocyanurate board insulation: ASTM C 1289, Type I, Class 1 or 2 for interior building surfaces. Joint tape shall be of type recommended by insulation board manufacturer for sealing joints and penetrations in insulation

Board insulation for foundations and floors where noted on the Plans shall be Extruded polystyrene, ASTM C 578. Type VI, 1.80 lbs/cf

Install foil-faced, polyisocyanurate board insulation with foil side towards interior of wall or ceiling surfaces, unless otherwise indicated. Tape joints and ruptures in foil, and seal each continuous area of insulation to surrounding construction to ensure airtight installation using joint tape or expanding foam sealant where tape is not practical.

Extruded polystyrene insulation shall be installed in a flat, continuous layer under slabs-on-grade and over the vapor barrier, fit insulation panels against foundation walls, piping and adjacent panels with less than ⅛" spaces, stagger joints in adjacent rows. Secure as required to prevent displacement during installation of concrete and structure backfill.

VAPOR BARRIERS OR RETARDERS

Polyethylene Vapor Retarder: 6 mils thick, with maximum permeance rating of 0.13 perm, unless otherwise indicated. Vapor-Retarder Tape shall be pressure-sensitive tape of the type recommended by vapor-retarder manufacturer for sealing joints and penetrations in vapor retarder.

TIMBER MATERIALS AND FABRICATIONS

All timber materials for walls, floors and any other items as may be noted on the Plans shall be west coast species, Yellow or Red Cedar. Timber shall be of the best quality, selected for appearance and shall be free of excessive knots, cracks, splinters or other defects.

All hardware for timber fabrications shall be per ASTM A307 and hot-dip galvanized, unless otherwise noted on the Plans, use plate or MI type washers for all nut connections on timber surfaces.

METAL ROOF SYSTEM

Roof Panels

Metal roofing shall be roll formed, 22-gauge, galvanized and paint coated steel. Basis of design: UNA-CLAD, UC-4 integral snap-lock standing seam roofing system as manufactured by Firestone, Firestone Building Products Company, 250 West 96th Street, Indianapolis, IN 46260, Tel. (800) 428-4442, or approved equal products meeting the listed mechanical and performance properties for the UNA-CLAD product. Steel sheet or coil materials shall be AISI G90 hot-dipped galvanized steel sheet commercial weight meeting ASTM A653/A653M-02 C Type B Minimum tensile yield strength of 33-45 KSI

Nominal size of panels shall be 10-18 inches in width and of the full length shown on Plans unless otherwise approved. Standing seam shall be 1 1/2" in nominal height. Provide thermally applied pre-assembled sealant for all seams. Final color to be selected by the Architect based on standard available colors provided by the manufacturer. Paint color preference shall be Classic Copper SR or Medium Bronze SR.

Handle, transport, store and install all metal roof panels and associated items per the manufacturers recommendations and instructions

Protective Coatings and Finishes

All metal roofing panels and associated battens, flashings and trim shall be hot-dip galvanized and painted. The top or exposed surface shall be painted with a minimum of two coats of approved paint finish of not less than 1.0 mil dry film thickness. The underside of the panels shall be painted with a wash coat of 0.3 mil minimum dry film thickness. Paint coatings shall be "Kynar 500/Hylar 5000 Fluropon" finish as manufactured by "Valspar" or approved similar/equal. All panel, flashing and associated coating systems shall have a demonstrated performance history and warranted for long-term exposure in an exposed marine environment, meeting a minimum 2,000 hour scribe rating of 7 (1/16" creepage) and a field rating of 10 in accordance with ASTM B 117.

Shop cut and fabricate all roof panels and other items to the specified size prior to applying paint coatings. Field coat all exposed edges with protective repair paint where field cutting or drilling is required

Sheet Metal Flashing and Trim

All sheet metal flashing, soffits, trim and roof drainage materials shall be of the same steel materials, thickness and finishes specified for the roof panels except that the thickness of drainage appurtenances shall be a minimum of 18 gauge or as indicated. Fabricate in minimum number of pieces possible or as otherwise shown on the Plans.

Snow Guard: Provide steel snow-guard or snow-stop as indicated on the plans and details. Cover entire roof plane. Fabricate from same materials and finishes as noted for metal roof panels. System shall utilize friction fasteners to roof ribs without through fasteners. Furnish and install per manufacturers recommendations.

Hardware / Fasteners

Unless otherwise noted on the Plans or approved by the Engineer use stainless steel self-tapping screws of the proper type, diameter and length recommended by the roofing manufacturer for attachment of all roof panels and other items. Location, spacing and number of fasteners for attachment of roof panels to subdeck shall be per the manufactures recommendations based on the design loading information outlined on Sheet S0.1. Exposed head fasteners shall be properly equipped with integral stainless steel washers and rubber or nylon gaskets as may be required.

Underlayment

Install waterproof underlayment sheet material under all roof panels. Underlayment materials shall be a waterproof, rubberized self adhering sheet membrane per ASTM D1970 such as "CLAD-GARD" as manufactured by Firestone or approved equal. Overlap sheets vertically and horizontally as recommended by the manufacturers installation recommendations.

Metal Roof Warranty Requirements

The roofing manufacturer shall provide a written warranty to the owner for all roof panels and associated trim materials to be free of faults, defects and corrosion for minimum of 20 years in accordance with their standard provisions.

DOORS

Exterior doors shall be of red or yellow cedar custom construction conform with drawings, all interior doors will be wood solid core flush type or as indicated in the drawings.

Door hardware shall be heavy duty mortise locks type L-series stainless steel, with hand levers model 03 finish 630, set as manufactured by Schlage. Key all doors alike and furnish five (5) sets of keys.

1 Wood Doors: Vancouver Doors
PO Box 1418
Puyallup, WA 98371
1-253-845-9581

Door Types

A: Commercial Solid Core Door 520P, clear cedar veneer, satin finish 3' wide

B: Commercial Solid Core Door 520P clear cedar veneer, clear satin finish 3' wide

C. DOUBLE FOLDING DOOR, Solid wood, vertical grain clear, satin finish width varies, see plan

D: Commercial Solid Core Door 520P, clear maple veneer, clear satin finish 3' wide

Frames: Wood Frames

3. Door Hardware SCHLAGE D Series RHO 626 - Rhodes 626 Phone. 1-800-847-1864
Fax. 1-800-452-0663

LOUVERS GRILLES

All louvers and grilles shall be stainless steel 14 gauge, satin finish as manufactured by Architectural Grille 42 Second Avenue, Brooklyn New York 11215, Tel (800)- 387-6267 or approved similar/equal.

PAINTS

Provide finished painted surfaces for all gypsum board, substrates and wood surfaces.

Base of design is painted by Benjamin Moore & Co Melrose Park, Illinois (B-M) Other products will be reviewed for equivalency. Paint colors as selected by Architect. Colors: Montgomery White HC -33
Chestertown Buff HC- 9

Gypsum Board: semi-gloss water-based epoxy system. Primer: Vinyl Acrylic Latex, 1.0 mils DFT/coat, minimum, Moorcraft Undercoater (284) or equivalent product. Finish Coats: Water Based Catalyzed Epoxy Semi-Gloss (20-30 units at 60 degrees F.), 2.5 - 3.0m mils DFT/coat. Two finish coats over primer. B-M: (2 coats) Acrylic Epoxy (M43/44) or equivalent product. Surfaces: GWB walls, ceiling; plywood at electrical room.

Wood: satin clear finish. Sealer, B-M: Benwood Polyurethane (435). Finish Coats: Polyurethane, Satin (20-30 units at 60 degrees F.), 1.5-1.7 mils DFT/coat. Filler: (2 coats) Penchrome Polyurethane 653-XK.

Toilet Accessories

American Specialties, Inc. NW Hardware Consultants Jeff Simms
1021 207th Place S.E. Tel. 425 402 4242
Bothell, Wa 98012 Fax. 425 427

TABLE OF CONTENTS

11 X 17 SHEET IS HALF SCALE

MRV ARCHI
1420 GLACIER A
JUNEAU, AK
907-586-1
FAX 907-46:
mrv@mrvarchit

WRANGELL CARVING SHED
Wrangell Cooperative Association and Alaska Native Sisterhood

SHEET TITLE:
NOTES
SPECIFICA

DATE: JANUARY
SCALE:
DRAWN:
CHECKED:

SHEET NO
G0

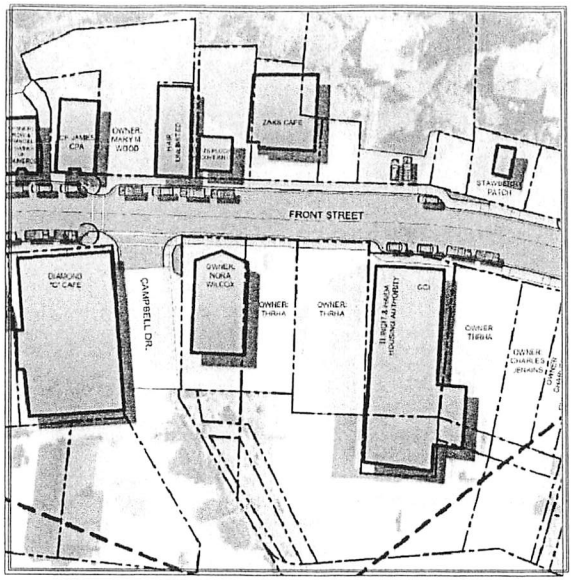

WRANGELL DOWNTOWN STREET IMPROVEMENTS - FRONT STREET

2 Scale: NO SCALE

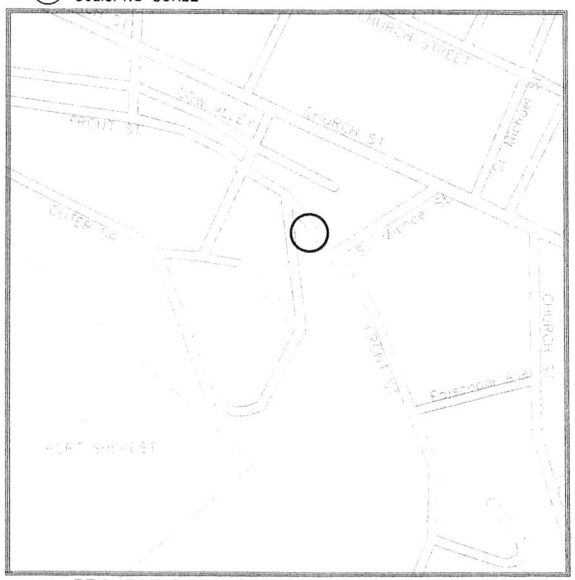

3 PROJECT LOCATION

Scale: NO SCALE

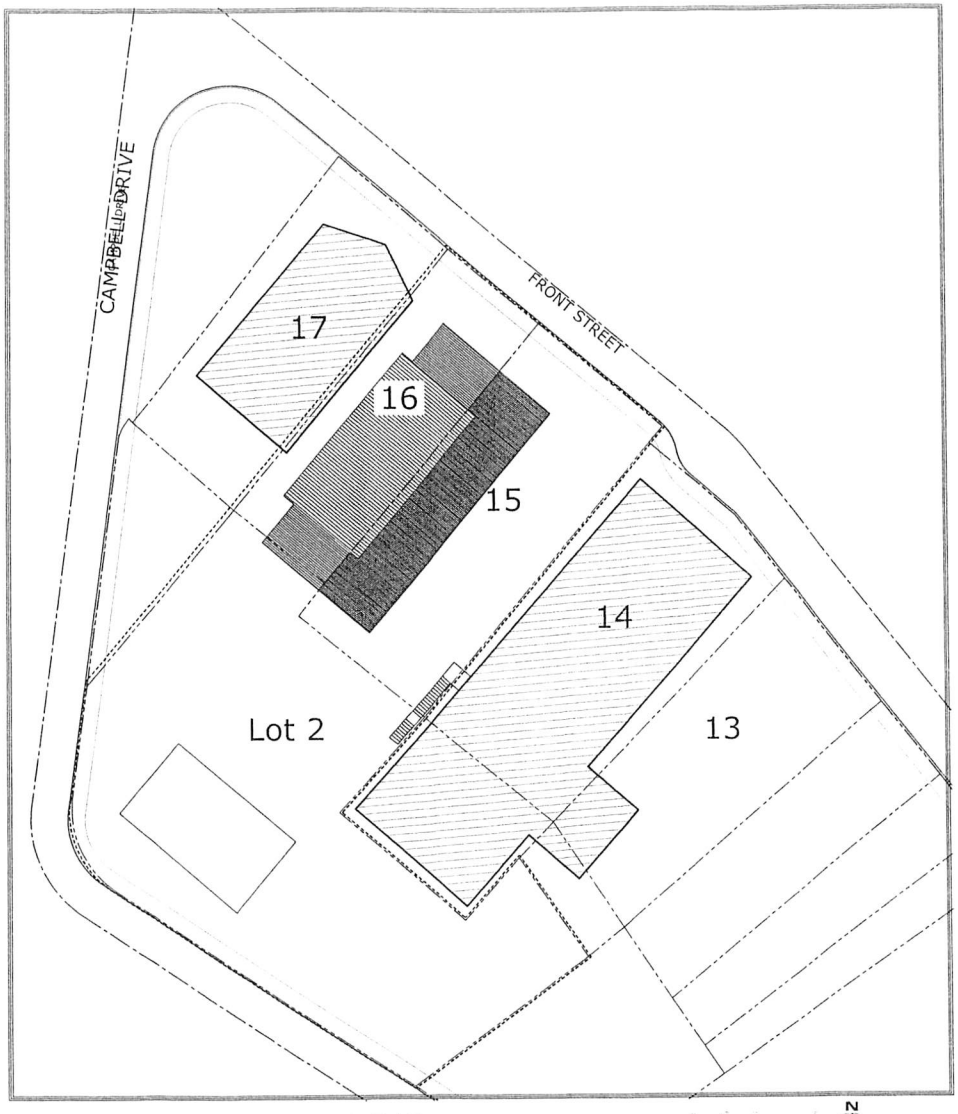

1 SITE PLAN

Scale: 1"=20'-0"

SCALE: 1" = 20'-0

N

11 X 17 SHEET IS HALF SCALE

MRV ARCHI
1420 GLACIER A
JUNEAU, AK
907-586-1
FAX 907-46.
mrv@mrvarchit

WRANGELL CARVING SHED

Wrangell Cooperative Association and Alaska Native Sisterhood

SHEET TITLE: SITE PLAI

DATE: JANUAR
SCALE:
DRAWN:
CHECKED:

SHEET NO. A1

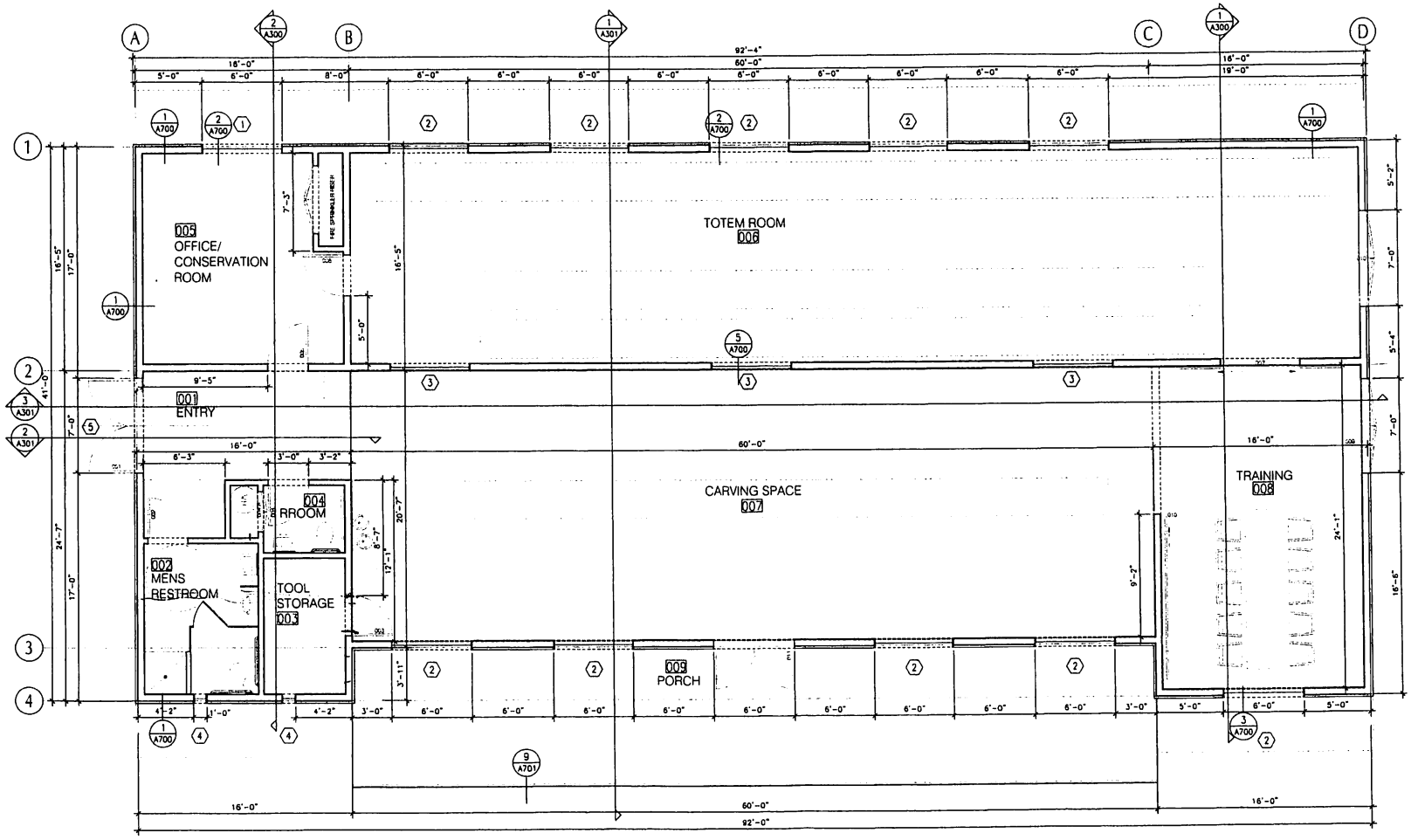

1 FLOOR PLAN
Scale: 1/4"=1'-0"

11 X 17 SHEET IS HALF SCALE

MRV ARCHI
1420 GLACIER A
JUNEAU, AK
907-586-1
FAX 907-46
mrv@mrvarchit

WRANGELL CARVING SHED

Wrangell Cooperative Association and Alaska Native Sisterhood

SHEET TITLE:
FLOOR PL

DATE: JANUAR
SCALE:
DRAWN:
CHECKED:

SHEET NO.
A2

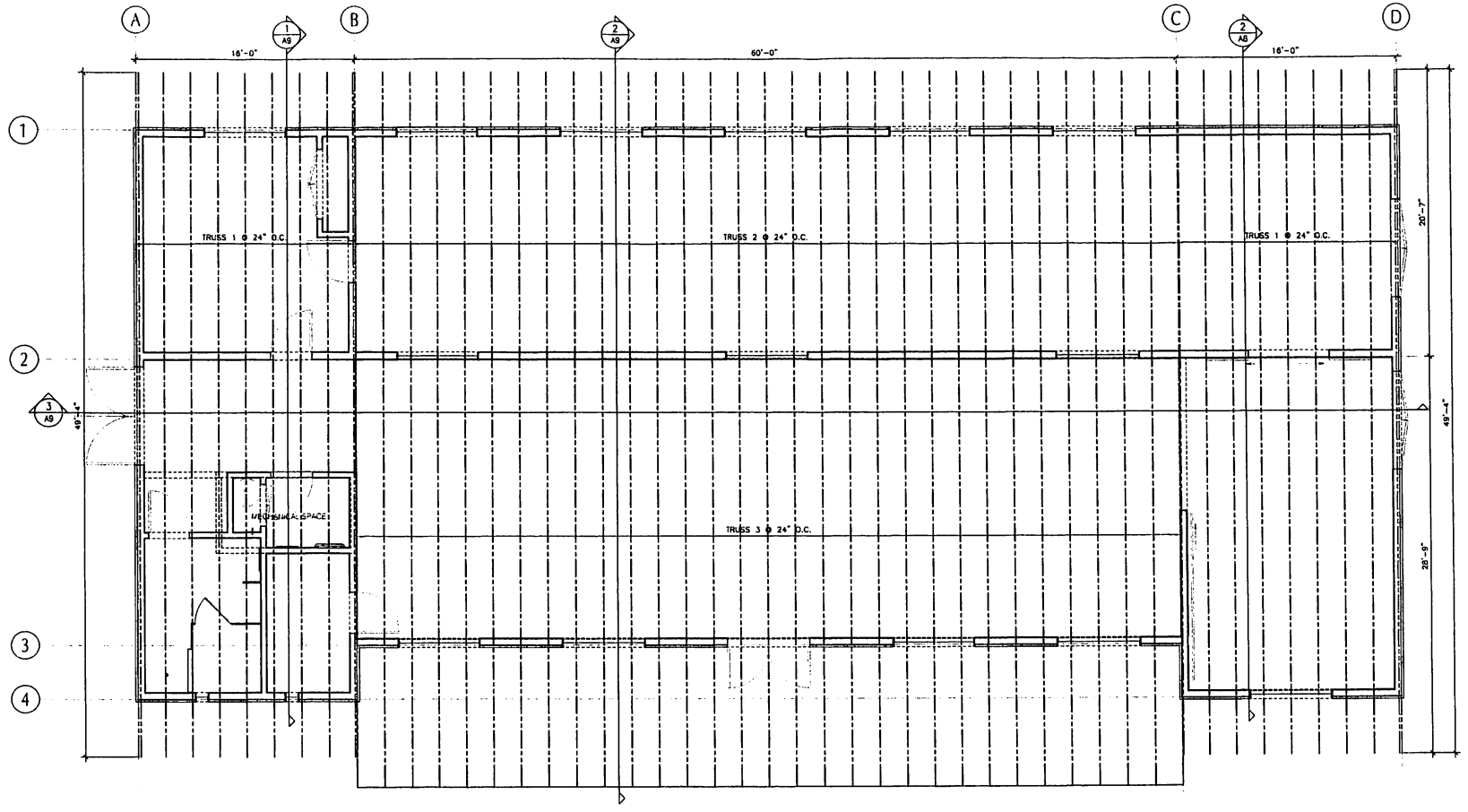

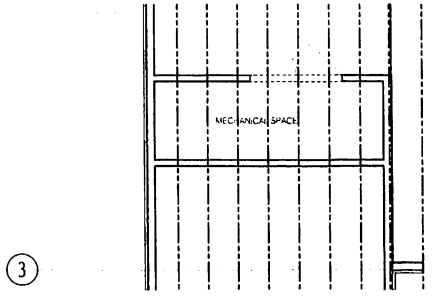

1 ROOF FRAMING PLAN
Scale: 1/4"=1'-0"

SCALE 1/4" = 1'-0"

11 X 17 SHEET IS HALF SCALE

MRV ARCHI
1420 GLACIER A
JUNEAU, AK
907-586-1
FAX 907-46
mrv@mrvarchit

WRANGELL CARVING SHED

Wrangell Cooperative Association and Alaska Native Sisterhood

SHEET TITLE:
ROOF FR
PLAN

DATE: JANUARY
SCALE:
DRAWN:
CHECKED:

SHEET NO.
A2

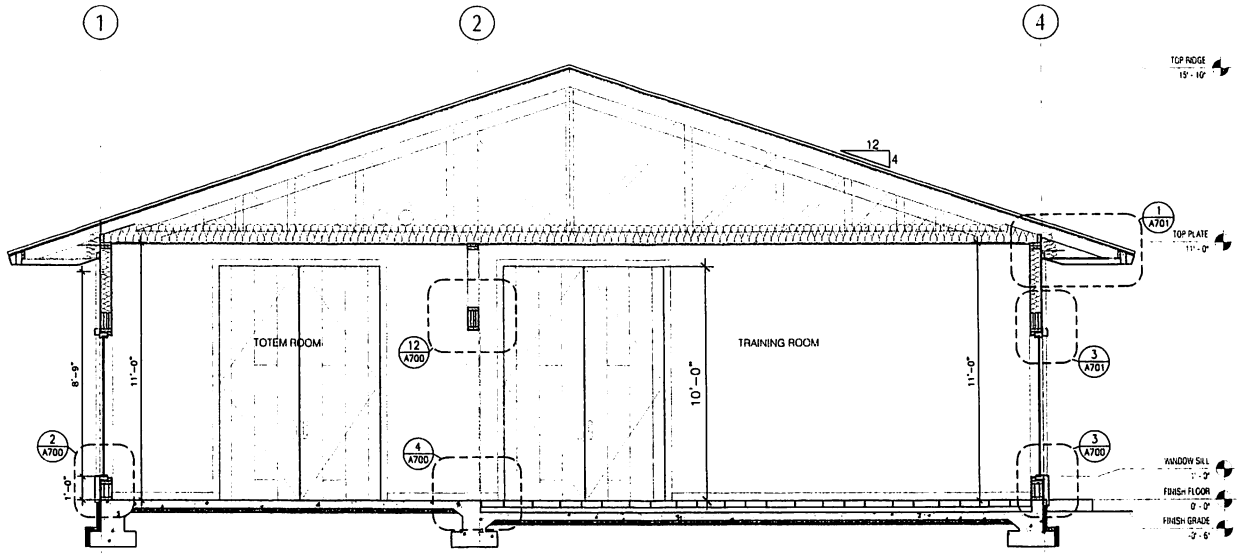

1 **BUILDING SECTION**
Scale: 3/8" = 1'-0"

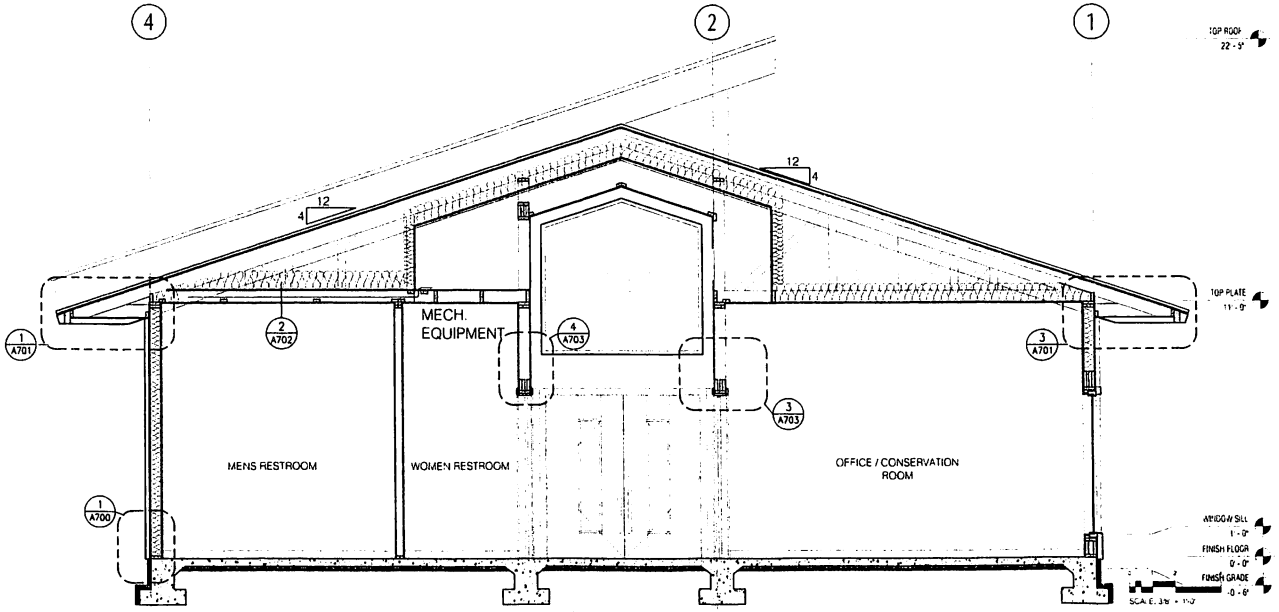

2 **BUILDING SECTION**
Scale: 3/8" = 1'-0"

11 X 17 SHEET
IS HALF SCALE

MRV ARCHI
1420 GLACIER A
JUNEAU, AK
907-586-1
FAX 907-46
mrv@mrvarchit

WRANGELL CARVING SHED

Wrangell Cooperative Association and Alaska Native Sisterhood

SHEET TITLE:
BUILDING SECTIONS

DATE: SEP
SCALE:
DRAWN:
CHECKED:

SHEET NO
A3

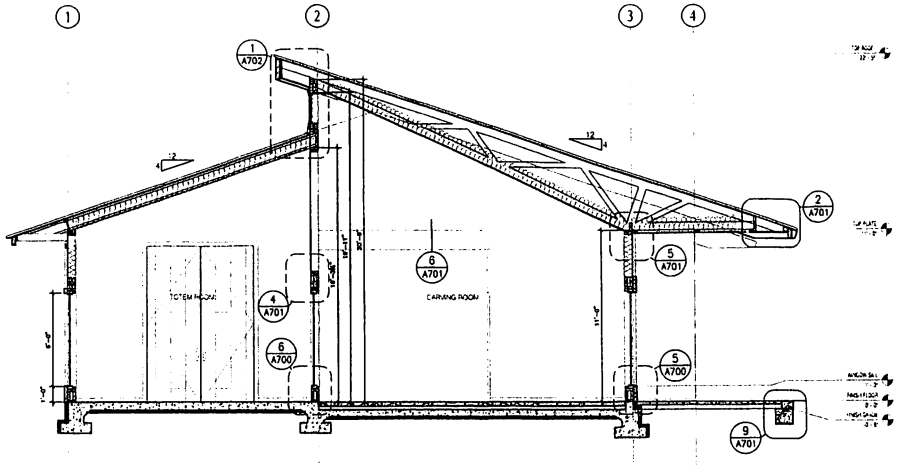

1 **BUILDING SECTION**
Scale: 1/4" = 1'-0"

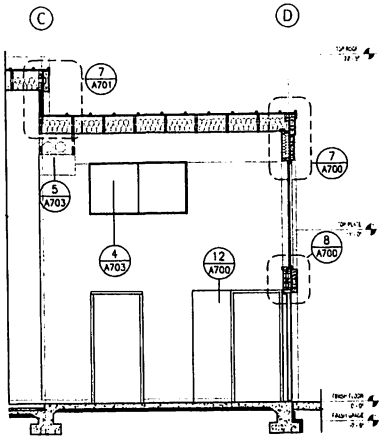

2 **BUILDING SECTION**
Scale: 1/4" = 1'-0"

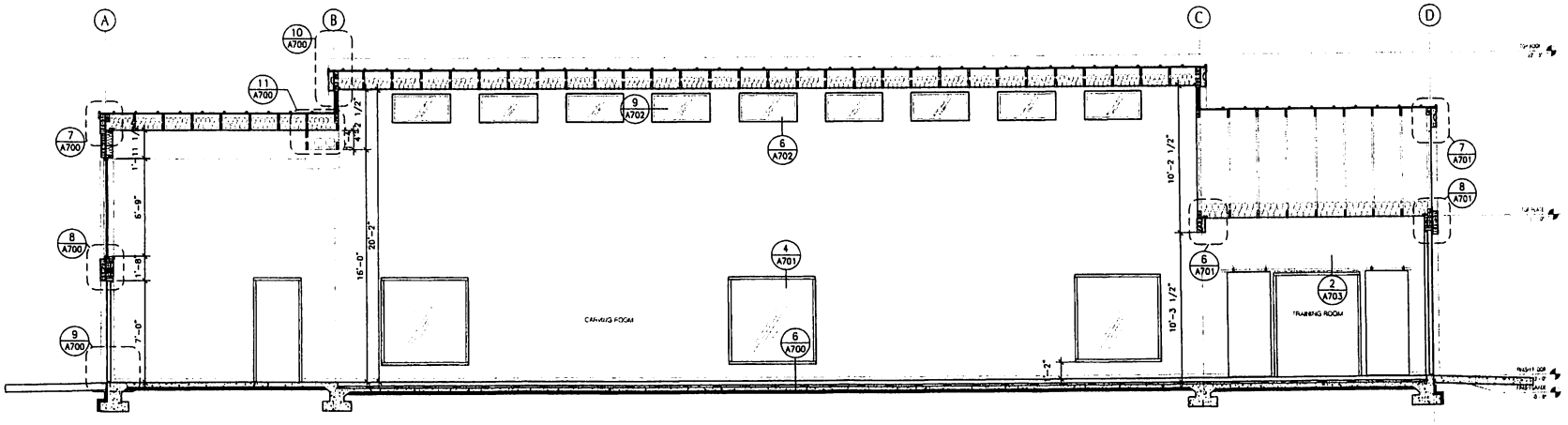

3 **BUILDING SECTION**
Scale: 1/4" = 1'-0"

11 x 17 SHEET
IS HALF SCALE

MRV ARCHI
1420 GLACIER A
JUNEAU, AK
907-586-1
FAX 907-46
mrv@mrvarchit

WRANGELL CARVING SHED

Wrangell Cooperative Association and Alaska Native Sisterhood

SHEET TITLE:
BUILDING SECTIONS

DATE: SEP
SCALE:
DRAWN:
CHECKED:

SHEET NO.
A3

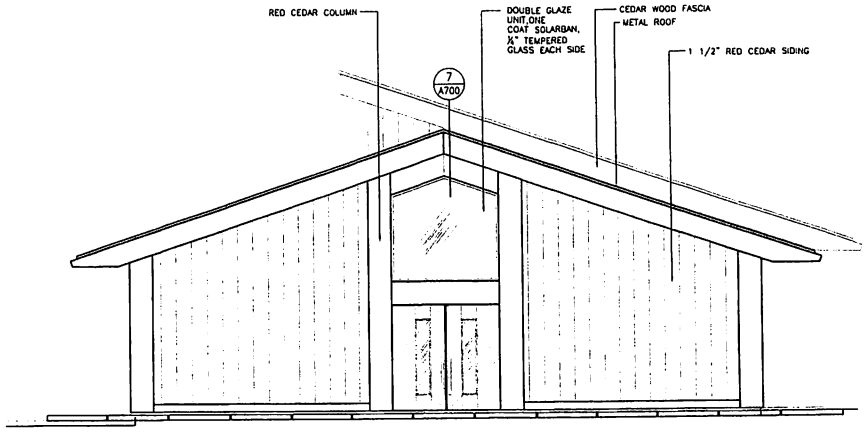

1 **BUILDING FRONT ELEVATION**
Scale: 1/4" = 1'-0"

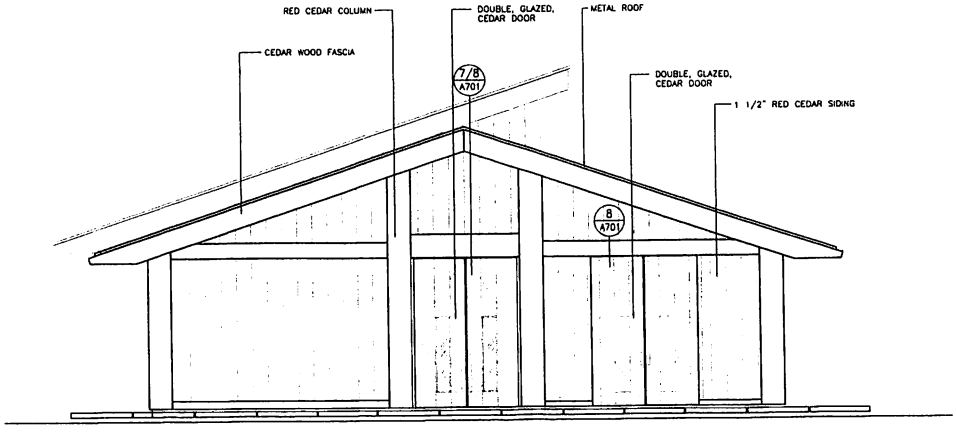

2 **BUILDING BACK ELEVATION**
Scale: 1/4" = 1'-0"

11 X 17 SHEET IS HALF SCALE

MRV ARCHI
1420 GLACIER A
JUNEAU, AK
907-586-1
FAX 907-46.
mrv@mrvarchit

WRANGELL CARVING SHED

Wrangell Cooperative Association and Alaska Native Sisterhood

SHEET TITLE:
ELEVATIOI

DATE: JANUAR
SCALE:
DRAWN:
CHECKED:

SHEET NO
A4

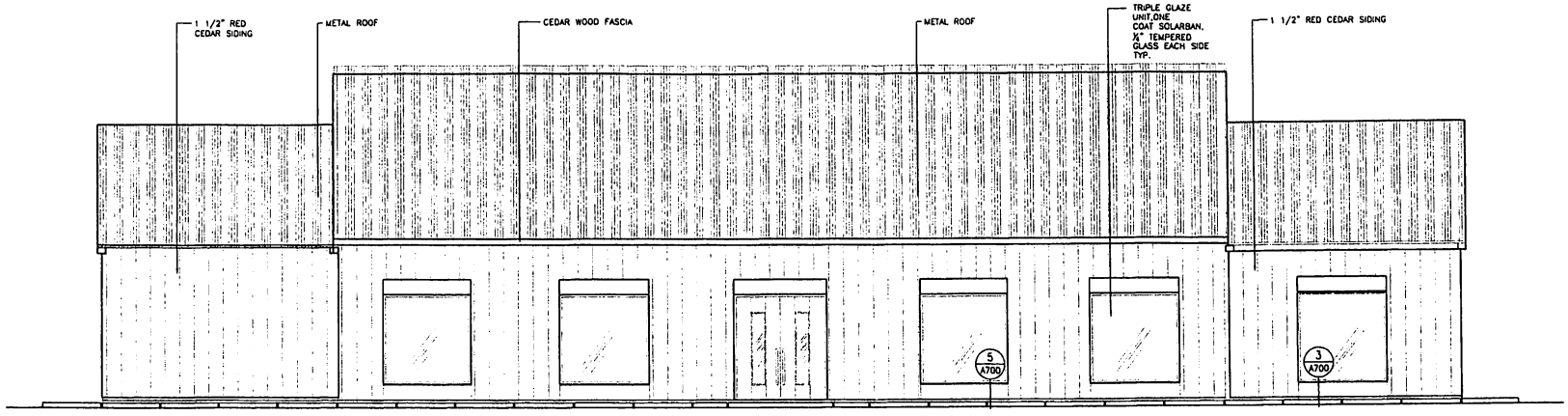

1 BUILDING WEST SECTION
Scale: 3/8" = 1'-0"

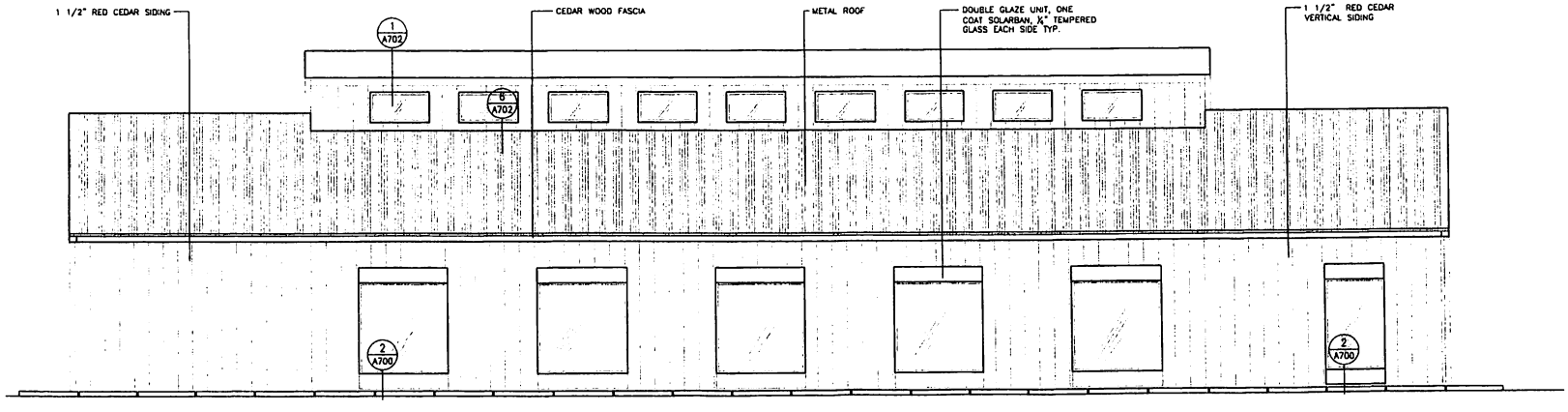

2 BUILDING EAST SECTION
Scale: 1/4" = 1'-0"

11 X 17 SHEET IS HALF SCALE

MRV ARCHI
1420 GLACIER A
JUNEAU, AK
907-586-1
FAX 907-46
mrv@mrvarchit

WRANGELL CARVING SHED
Wrangell Cooperative Association and Alaska Native Sisterhood

SHEET TITLE:
ELEVATIO

DATE: JANUAR
SCALE:
DRAWN:
CHECKED:

SHEET NO.
A4

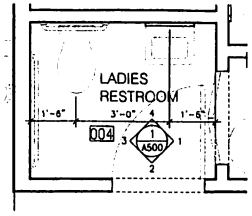

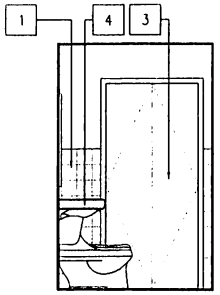

1

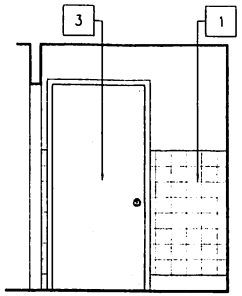

2

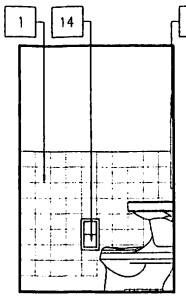

3

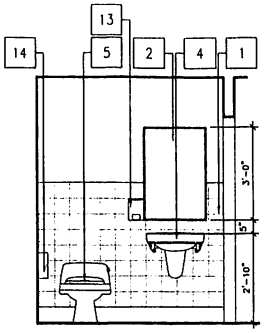

4

LEGEND

1. PORCELAIN TILE
2. 24" X 36" SS FRAMED MIRROR
3. DOOR - PAINT
4. LAVATORY
5. WATER CLOSET
6. URINAL
7. G.B. PAINT
8. SHOWER HARDWARE
9. FIXED WINDOW
10. FOLDING SHOWER SEAT
11. GRAB BAR W/HORIZ. BLOCKING IN WALL
12. SHOWER GLASS DOOR
13. SOAP DISPENSER
14. TOILET PAPER DISPENSER

1 LADIES RESTROOM FLOOR PLAN AND ELEVATIONS
Scale: 1/2" = 1'-0"

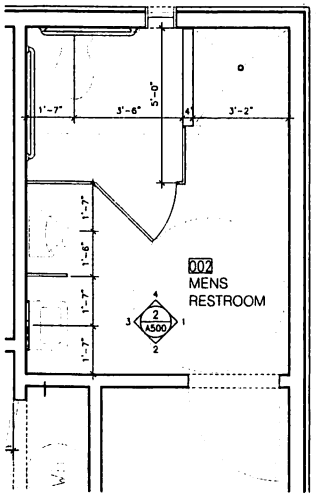

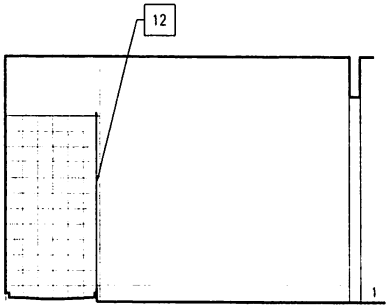

1

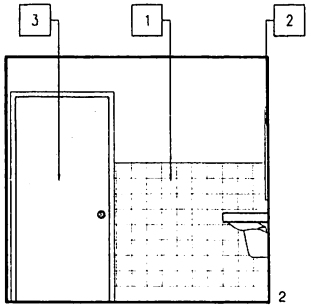

2

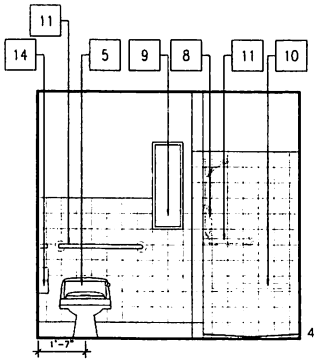

4

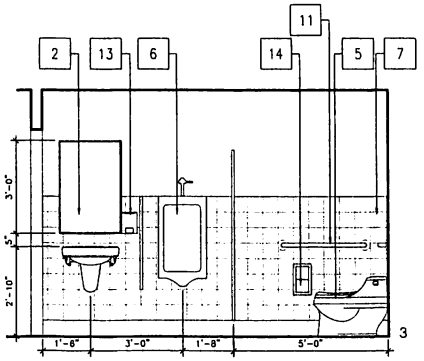

3

2 MENS RESTROOM FLOOR PLAN AND ELEVATIONS
Scale: 1/2" = 1'-0"

11 X 17 SHEET IS HALF SCALE

MRV ARCHI
1420 GLACIER A
JUNEAU, AK
907-586-1
FAX 907-46.
mrv@mrvarchit

WRANGELL CARVING SHED

Wrangell Cooperative Association and Alaska Native Sisterhood

SHEET TITLE:
BATHROOM ENLARGED PLANS &

DATE: JANUARY
SCALE:
DRAWN:
CHECKED:

SHEET NO.
A5

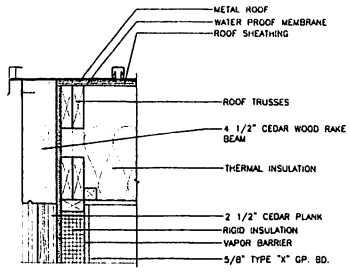

10 TOP BEAM • WALL DETAIL
Scale: 1 1/2"= 1'-0

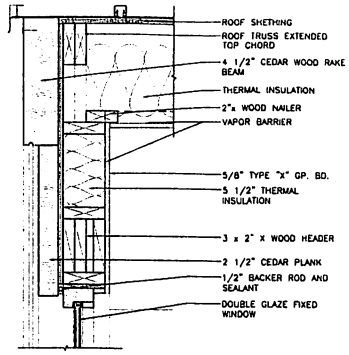

7 RAKE • WALL DETAIL
Scale: 1 1/2"= 1'-0

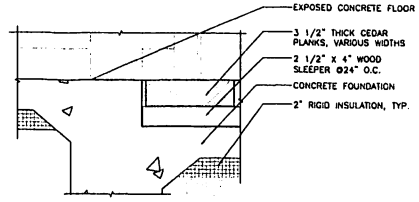

4 TOTEM STORAGE & CARVING AREA DETAIL
Scale: 1 1/2"= 1'-0

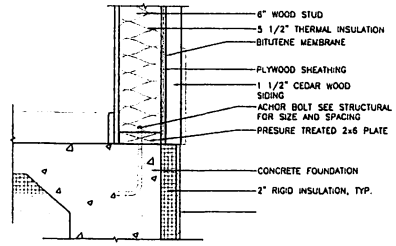

1 EXT. WALL • FOUNDATION DETAIL
Scale: 1 1/2"= 1'-0

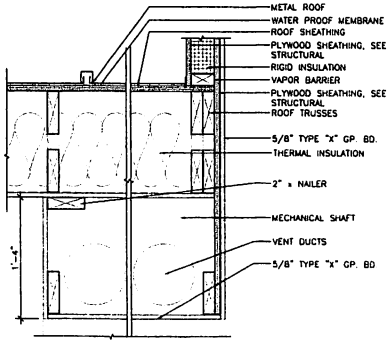

11 MECHANICAL SHAFT AT CEILING • WALL DETAIL
Scale: 1 1/2"= 1'-0

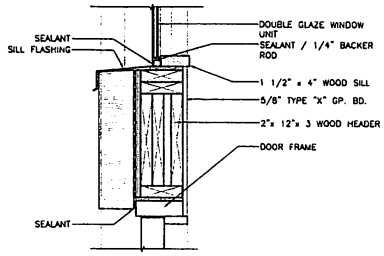

8 TOP BEAM • WALL DETAIL
Scale: 1 1/2"= 1'-0

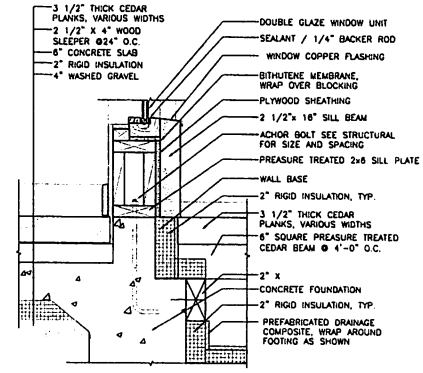

5 WINDOW SILL DETAIL
Scale: 1 1/2"= 1'-0

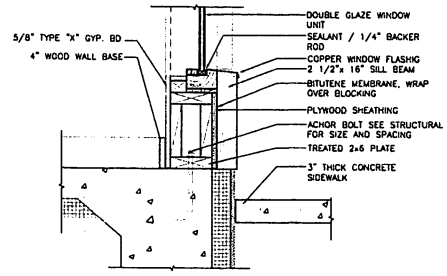

2 WINDOW SILL DETAIL
Scale: 1 1/2"= 1'-0

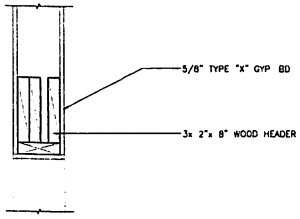

12 HEADER DETAIL
Scale: 1 1/2"= 1'-0

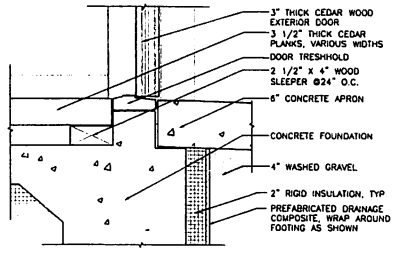

9 TRANSITION DETAIL AT EXIT
Scale: 1 1/2"= 1'-0

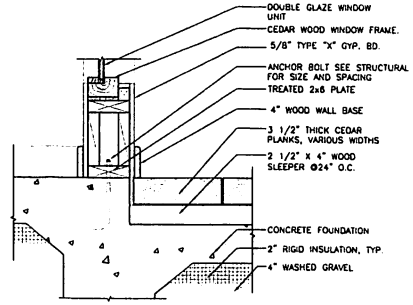

6 WINDOW SILL • CARVING AREA / INT.
Scale: 1 1/2"= 1'-0

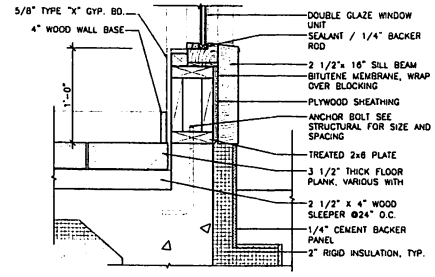

3 WINDOW SILL • CLASSROOM / EXT.
Scale: 1 1/2"= 1'-0

11 X 17 SHEET IS HALF SCALE

MRV ARCHI
1420 GLACIER A
JUNEAU, AK
907-586-1
FAX 907-46.
mrv@mrvarchit

WRANGELL CARVING SHED
Wrangell Cooperative Association and Alaska Native Sisterhood

SHEET TITLE:
DETAILS

DATE: JANUARY
SCALE:
DRAWN:
CHECKED:

SHEET NO.
A7

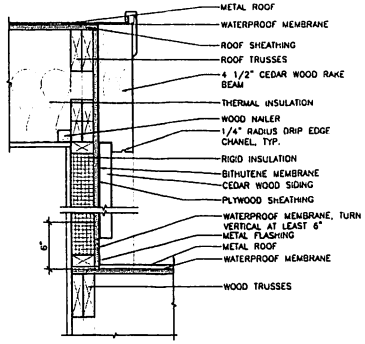

7 GABLE END DETAIL
Scale: 1 1/2"= 1'-0

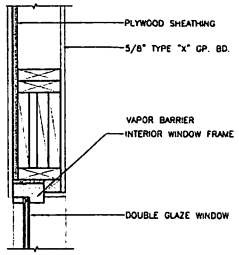

4 WINDOW HEADER DETAIL • GRID 3
Scale: 1 1/2"= 1'-0

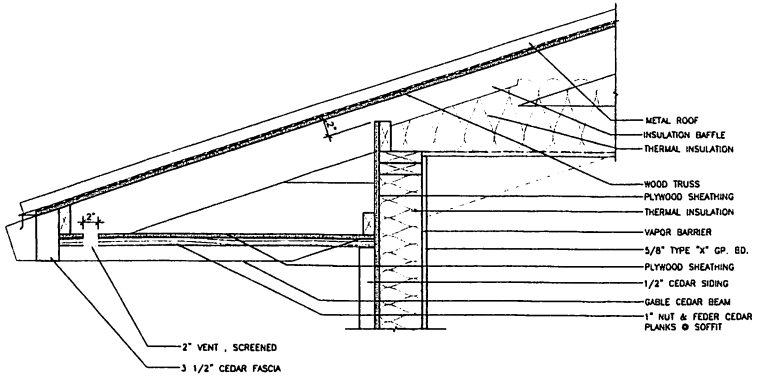

1 EAVE DETAIL
Scale: 1 1/2"= 1'-0

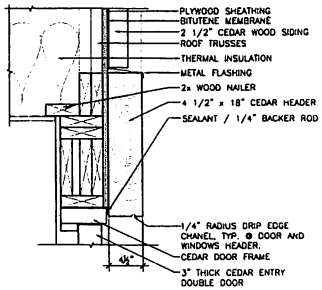

8 DOOR HEADER DETAIL
Scale: 1 1/2"= 1'-0

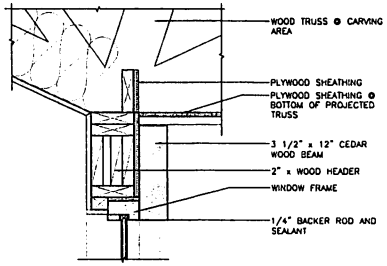

5 WINDOW HEADER DETAIL • PORCH
Scale: 1 1/2"= 1'-0

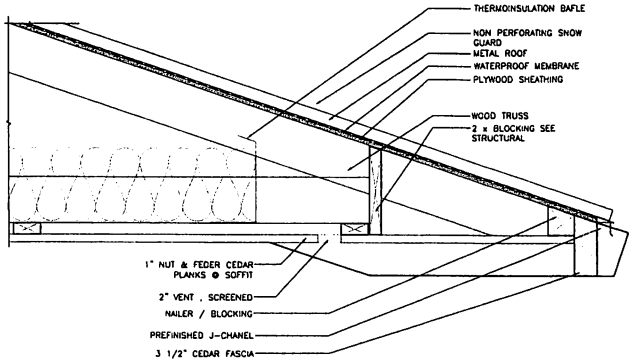

2 EAVE DETAIL • PORCH
Scale: 1 1/2"= 1'-0

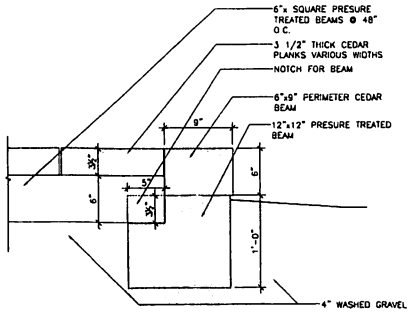

9 EDGE OF PORCH DETAIL
Scale: 1 1/2"= 1'-0

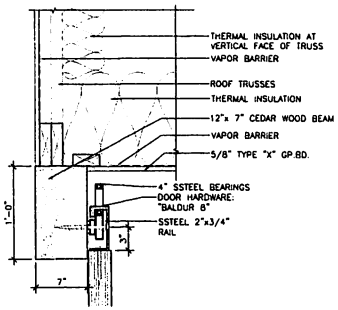

6 BEAM • WALL DETAIL
Scale: 1 1/2"= 1'-0

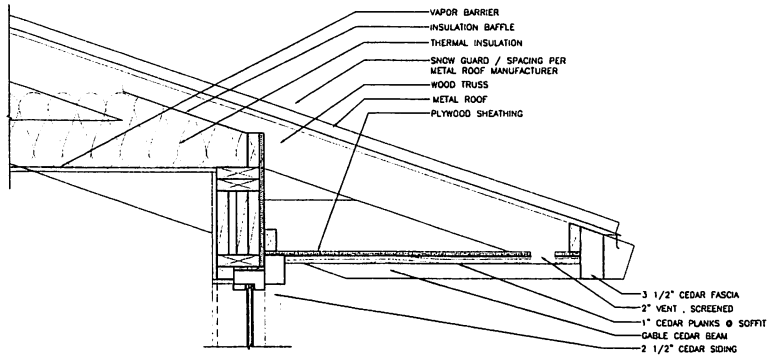

3 EAVE DETAIL
Scale: 1 1/2"= 1'-0

11 X 17 SHEET IS HALF SCALE

MRV ARCHI
1420 GLACIER A
JUNEAU, AK
907-586-1
FAX 907-46.
mrv@mrvarchit

WRANGELL CARVING SHED
Wrangell Cooperative Association and Alaska Native Sisterhood

SHEET TITLE:
DETAILS

DATE: JANUARY
SCALE:
DRAWN:
CHECKED:

SHEET NO
A7

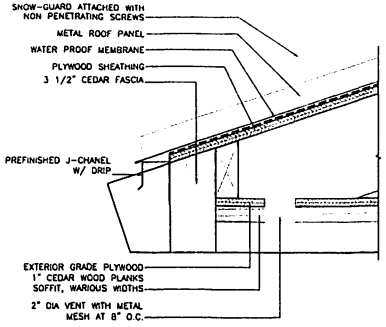

7 **DETAIL • EAVE**
Scale: 3"= 1'-0

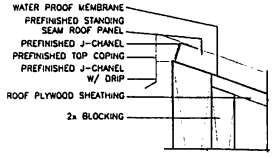

4 **TOP COPING DETAIL**
Scale: 3"= 1'-0

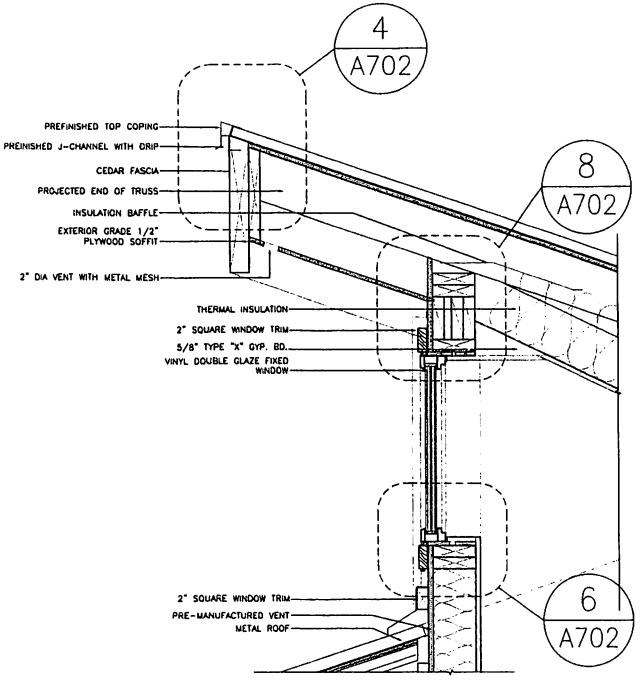

1 **DETAIL • CLERESTORY**
Scale: 1 1/2"= 1'-0

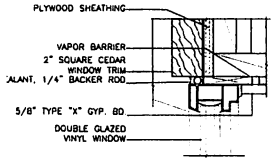

8 **HEADER • CLERESTORY**
Scale: 3"= 1'-0

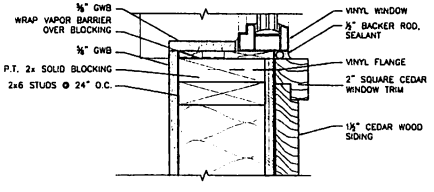

5 **JAMB • CLERESTORY**
Scale: 3"= 1'-0

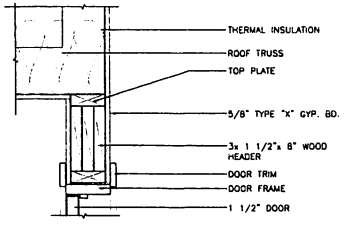

3 **DETAIL**
Scale: 1 1/2"= 1'-0

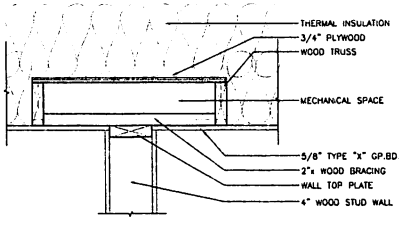

2 **FLOOR & WALL CONNECTION**
Scale: 1 1/2"= 1'-0

11 X 17 SHEET IS HALF SCALE

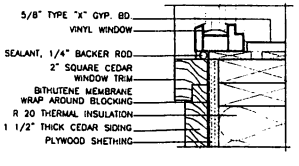

9 **JAMB DETAIL • CLERESTORY**
Scale: 3"= 1'-0

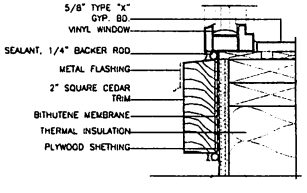

6 **SILL DETAIL • CLERESTORY**
Scale: 3"= 1'-0

MRV ARCHI
1420 GLACIER A
JUNEAU, AK
907-586-1
FAX 907-46.
mrv@mrvarchit

WRANGELL CARVING SHED

Wrangell Cooperative Association and Alaska Native Sisterhood

SHEET TITLE:
DETAILS

DATE: JANUARY
SCALE:
DRAWN:
CHECKED:

SHEET NO.
A7(

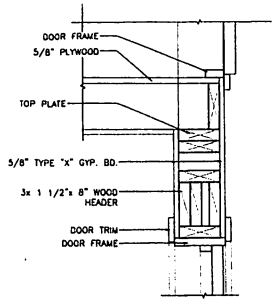

4 DETAIL
Scale: 1 1/2"= 1'-0

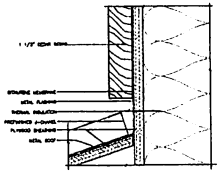

1 SILL DETAIL • CLERESTORY
Scale: 3"= 1'-0

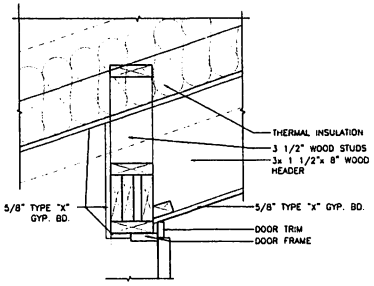

5 DETAIL
Scale: 1 1/2"= 1'-0

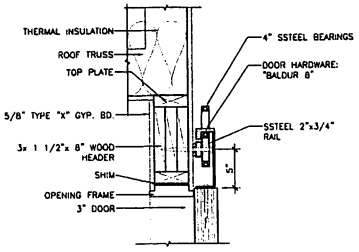

2 DOOR TRACK DETAIL
Scale: 1 1/2"= 1'-0

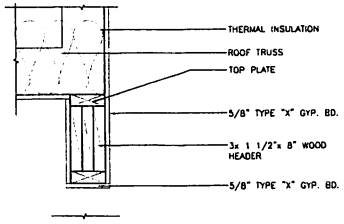

6 DETAIL
Scale: 1 1/2"= 1'-0

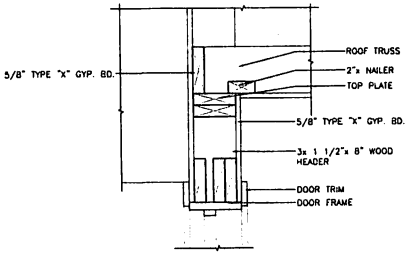

3 DETAIL
Scale: 1 1/2"= 1'-0

11 X 17 SHEET IS HALF SCALE

MRV ARCHI
1420 GLACIER A
JUNEAU, AK
907-586-1
FAX 907-46.
mrv@mrvarchit

WRANGELL CARVING SHED

Wrangell Cooperative Association and Alaska Native Sisterhood

SHEET TITLE:
DETAILS

DATE: JANUAR
SCALE:
DRAWN:
CHECKED:

SHEET NO.
A7

ABBREVIATIONS

(A)	ABOVE
AB	ANCHOR BOLT
ACI	AMERICAN CONCRETE INSTITUTE
ADDL	ADDITIONAL
AGGR	AGGREGATE
AISC	AMERICAN INSTITUTE OF STEEL CONSTRUCTION
AITC	AMERICAN INSTITUTE OF TIMBER CONSTRUCTION
ALT	ALTERNATE
ALUM	ALUMINUM
ARCH	ARCHITECT, ARCHITECTURAL
@	AT
APPROX	APPROXIMATELY
ASCE	AMERICAN SOCIETY OF CIVIL ENGINEERS
ASTM	AMERICAN SOCIETY FOR TESTING AND MATERIALS
AWS	AMERICAN WELDING SOCIETY
&	AND
(B)	BELOW
B	BOTTOM (BEAM AND JOIST SCHEDULES ONLY)
BD	BOARD
℄	BUILDING LINE
BLDG	BUILDING
BLKG	BLOCKING
BM	BEAM
BOD	BOTTOM OF DECK
BOT	BOTTOM
BRG	BEARING
BSMT	BASEMENT
BTWN	BETWEEN
C	AMERICAN CHANNELS
CG	CENTER OF GRAVITY
CJ	CONSTRUCTION JOINT
CJP	COMPLETE JOINT PENETRATION
CIP	CAST-IN-PLACE
℄	CENTER LINE
CLG	CEILING
CLR	CLEAR
CMU	CONCRETE MASONRY UNIT
CO	CONCRETE OPENING
COL	COLUMN
COMM	COMMON
CONC	CONCRETE
CONN	CONNECTION
CONSTR	CONSTRUCTION
CONT	CONTINUOUS
CONTR	CONTRACTOR
CTJ	CONTROL JOINT, CONTRACTION JOINT
CTR	CENTER
CTSK	COUNTERSUNK
CU	CUBIC
DBL	DOUBLE
DC	DEMAND CRITICAL
DEPT	DEPARTMENT
DET	DETAIL
DIA, Ø	DIAMETER
DIAB	DRILLED-IN ADHESIVE BOLT
DIAG	DIAGONAL
DIAPH	DIAPHRAGM
DIEB	DRILLED-IN EXPANSION BOLT
DIM	DIMENSION
DN	DOWN
do	DITTO
DP	DEEP
DWG	DRAWING
DWL	DOWEL
E	EAST
(E)	EXISTING
EA	EACH
EB	EXPANSION BOLT
EF	EACH FACE
EXJ	EXPANSION JOINT
EL	ELEVATION (HEIGHT)
ELEC	ELECTRICAL
ELEV	ELEVATOR
ENCL	ENCLOSURE
ENGR	ENGINEER
EOD	EDGE OF DECK
EQ	EQUAL
EQUIP	EQUIPMENT
ES	EACH SIDE
EW	EACH WAY
EXIST	EXISTING
EXP	EXPANSION
EXT	EXTERIOR

FD	FLOOR DRAIN
FDN	FOUNDATION
FIN	FINISH, FINISHED
FF	FAR FACE
FLG	FLANGE
FLR	FLOOR
FOS	FACE OF STUDS
FRT	FIRE RETARDANT TREATED
FS	FAR SIDE
FT	FOOT, FEET
FTG	FOOTING
FUT	FUTURE
FV	FIELD VERIFY
GA	GAUGE, GAGE
GALV	GALVANIZED
GEN	GENERAL
GL	GLUE LAMINATED
GND	GROUND
GR	GRADE
GB	GYPSUM BOARD
GYP	GYPSUM
HDG	HOT DIPPED GALVANIZED
HORIZ	HORIZONTAL
HP	HP STEEL SHAPE
HSB	HIGH STRENGTH BOLT
HSS	HOLLOW STRUCTURAL SECTION
HT	HEIGHT
IBC	INTERNATIONAL BUILDING CODE
ICF	INSULATED CONCRETE FORM
ID	INSIDE DIAMETER
IF	INSIDE FACE
IN OR "	INCH
INCL	INCLUDE
INSUL	INSULATION, INSULATED
INT	INTERIOR
JT	JOINT
JST	JOIST
K	KIP, KIPS
KSI	KIPS PER SQUARE INCH
L	ANGLE
LB OR #	POUND
LGS	LIGHT GAGE STEEL
LLBB	LONG LEG BACK TO BACK
LLH	LONG LEG HORIZONTAL
LLV	LONG LEG VERTICAL
LONGIT	LONGITUDINAL
LRFD	LOAD AND RESISTANCE FACTOR DESIGN
LSL	LAMINATED STRAND LUMBER
LSLT	LONG SLOTTED HOLES
LT	LIGHT
LT WT	LIGHT WEIGHT
LVL	LAMINATE VENEER LUMBER
LVF	LOW VELOCITY FASTENER
M	MISCELLANEOUS SHAPE
MAS	MASONRY
MATL	MATERIAL
MAX	MAXIMUM
MECH	MECHANICAL
MFR	MANUFACTURER
MFRG	MANUFACTURING
MIN	MINIMUM
MISC	MISCELLANEOUS
MT	STRUCTURAL TEE FROM M SERIES SECTION
MTD	MOUNTED
MTL	METAL
N	NORTH
NF	NEAR FACE
NFS	NON FROST SUSCEPTIBLE
NIC	NOT IN CONTRACT
No OR #	NUMBER
NOM	NOMINAL
NS	NEAR SIDE
NTS	NOT TO SCALE
OA	OVERALL
OC	ON CENTER
OD	OUTSIDE DIAMETER
OF	OUTSIDE FACE
OPNG	OPENING
OPP	OPPOSITE
OSB	ORIENTED STRAND BOARD
OVS	OVERSIZED HOLES

P/C	PRECAST
PCWT	PLATE CONNECTED WOOD TRUSS
PERP	PERPENDICULAR
PJP	PARTIAL JOINT PENETRATION
ℙ	PLATE (STEEL)
PL	PLATE (WOOD)
PLCS	PLACES
PLWD	PLYWOOD
P/S	PRESTRESSED
PSF	POUNDS PER SQUARE FOOT
PSI	POUNDS PER SQUARE INCH
PSL	PARALLEL STRAND LUMBER
PT	PRESERVATIVE TREATED
P/T	POST TENSION
R	RADIUS
RD	ROUND
REF	REFERENCE
REINF	REINFORCING, REINFORCEMENT, REINFORCED
REQD	REQUIRED
RO	ROUGH OPENING
S	AMERICAN STANDARD STEEL SHAPE, SOUTH
SCHED	SCHEDULE
SECT	SECTION
SH PL	SHEAR PLATE
SHT	SHEET
SHTHG	SHEATHING
SIM	SIMILAR
SIP	STRUCTURAL INSULATED PANEL
SLBB	SHORT LEGS BACK TO BACK
SMS	SHEET METAL SCREW
SOG	SLAB ON GRADE
SP	SPIRAL
SPA	SPACE, SPACING, SPACES
SPEC	SPECIFICATION
SQ	SQUARE
SS	STAINLESS STEEL
SSLT	SHORT SLOTTED HOLE
ST	STRUCTURAL TEE FROM S SERIES SECTION
STD	STANDARD
STIFF	STIFFENER
STIRR	STIRRUP
STL	STEEL
STRUCT	STRUCTURAL
SUPT	SUPPORT
SUSP	SUSPENDED
SYMM	SYMMETRICAL
T	TOP
TC	TOP OF CURB
T&G	TONGUE AND GROOVE
TEMP	TEMPERATURE, TEMPORARY
THK	THICK
THRU	THROUGH
TOC	TOP OF CONCRETE
TOF	TOP OF FOOTING
TOS	TOP OF STEEL
TOW	TOP OF WALL
TRANS	TRANSVERSE
TYP	TYPICAL
UL	UNDERWRITERS LABORATORY
UON	UNLESS OTHERWISE NOTED
UT	ULTRASONIC TEST
VEF	VERTICAL EACH FACE
VERT	VERTICAL
VIF	VERTICAL INSIDE FACE
VOF	VERTICAL OUTSIDE FACE
W	WEST, W SERIES SECTION
W/	WITH
W/O	WITHOUT
WD	WOOD
WH	WEEP HOLE
WHS	WELDED HEADED STUD
WP	WORK POINT
WS	WATERSTOP
WT	WEIGHT, STRUCTURAL TEE FROM W SERIES SECTION
WTS	WELDED THREADED STUD
WWF	WELDED WIRE FABRIC
YD	YARD

GENERAL STRUCTURAL NOTES

THE FOLLOWING NOTES APPLY UNLESS INDICATED OTHERWISE:

CODE:

INTERNATIONAL BUILDING CODE, 2006 EDITION.

DESIGN SOIL PRESSURE:

3000 PSF MAX DEAD + LIVE LOAD.

CAST FOOTINGS ON COMPACTED EXISTING SUBGRADE, 2'-0" MINIMUM BELOW FINISHED GRADE. CAST SLAB ON GRADE OVER 6" THICK COMPACTED GRANULAR FILL OVER COMPACTED SUBGRADE.

DESIGN LIVE LOADS:

ROOF	Pg = 60 PSF, Ps = 45 PSF Ce = 0.9, I = 1.0, Ct = 1.2
SNOW DRIFT	ASCE 7-05, CHAPTER 7
WIND	120 MPH 3-SECOND GUST I = 1.0, EXPOSURE D BUILDING CATEGORY II (GCpi) = 0.18, qh = 32.3
SEISMIC	I = 1.0, SEISMIC USE GROUP II Ss = 0.17, S1 = 0.15 SOIL SITE CLASS D Sds = 0.18, Sd1 = 0.22, SEISMIC DESIGN CATEGORY D BASIC SEISMIC FORCE RESISTING SYSTEM: PLYWOOD SHEAR WALL

REINFORCED CONCRETE:

ALL CONCRETE - f'c = 3000 PSI, MINIMUM 6 SACKS OF CEMENT PER CUBIC YARD. SUBMIT MIX DESIGN.

UNLESS OTHERWISE NOTED, REINFORCING STEEL SHALL CONFORM TO ASTM A615, GRADE 60. PROVIDE CLASS B SPLICE. SUBMIT REINFORCING STEEL SHOP DRAWINGS WITH DETAILS PER ACI 315 MANUAL OF STANDARD PRACTICE.

WELDED WIRE FABRIC PER ASTM A185. FURNISH IN FLAT SHEETS, NOT ROLLS. LAP EDGES 1 1/2 MESH MINIMUM.

CONCRETE COVER:

FOOTINGS 3". SLABS ON GRADE 1 1/2".

FOOTINGS:

PROVIDE CORNER BARS OF SAME SIZE AND NUMBER AS LONGITUDINAL REINFORCING AT CORNERS AND INTERSECTIONS, 30" LAP EACH LEG.

SLABS ON GRADE:

RIGIDLY SUPPORT REINFORCING WITH CONCRETE BLOCKS OR APPROVED ACCESSORIES. REINFORCE WITH W6 WELDED WIRE FABRIC WITH 4 INCH MESH 2" FROM TOP.

ANCHOR BOLTS:

ANCHOR BOLTS, ASTM F1554 GRADE 36.

GLUED-LAMINATED TIMBER:

BEAMS AND GIRDERS - DOUGLAS FIR SPECIES, COMBINATION 24F-V4. APPEARANCE - CONSTRUCTION GRADE. SUBMIT SHOP DRAWINGS.

PARALLEL STRAND LUMBER (PSL):

COLUMNS AND POSTS - 1.8E, Fb = 2400 PSI
BEAMS AND HEADERS - 2.0E, Fb = 2900 PSI

STRUCTURAL SAWN LUMBER:

LUMBER VISUALLY GRADED AND STAMPED PER WWPA STANDARD GRADING RULES. MOISTURE CONTENT OF LUMBER 2" OR LESS IN THICKNESS - 19 PERCENT MAXIMUM.
HEM-FIR SPECIES, #2 GRADE OR BETTER, Fb = 850 PSI.

CONVENTIONAL CONSTRUCTION PROVISIONS PER SECTION 2308 OF THE IBC. MINIMUM NAILING FOR CONNECTION OF VARIOUS COMPONENTS PER TABLE 2304.9.1 OF THE IBC. TREAT WOOD BEARING ON OR WITHIN 1" OF CONCRETE WITH PRESERVATIVE. USE MILD STEEL PLATE WASHERS AT ALL BOLT HEADS AND NUTS BEARING ON WOOD. ATTACH FOUNDATION PLATES AND SILLS TO CONCRETE WITH GALVANIZED BOLTS. USE COMMON NAILS ONLY. USE HOT-DIPPED GALVANIZED FASTENERS IN ALL PRESERVATIVE TREATED AND FIRE RETARDENT TREATED WOOD. USE GALVANIZED FRAMING HARDWARE MANUFACTURED BY SIMPSON COMPANY OR APPROVED EQUAL. ICC-ES CERTIFICATION REQUIRED.

PLYWOOD:

ROOF SHEATHING- PLYWOOD GRADE STRUCTURAL I, CD INT-APA WITH EXTERIOR GLUE LAID FACE GRAIN PERPENDICULAR TO SUPPORT - 3/4" THICK.

WALL SHEATHING - 7/16" THICK OSB.

NAILING AT ROOF PANEL EDGES 10d @ 6" OC. INTERMEDIATE SUPPORTS 10d @ 12" OC

NAILING AT WALL PANEL EDGES 8d @ 6" OC, EXCEPT SEE SHEARWALL SCHEDULE. INTERMEDIATE SUPPORTS 8d @ 12" OC.

METAL PLATE CONNECTED WOOD TRUSSES:

WOOD TRUSSES DESIGNED, MANUFACTURED AND INSTALLED PER TRUSS PLATE INSTITUTE SPECIFICATIONS. ICC-ES CERTIFICATION REQUIRED.

WEB AND CHORD SIZES INDICATED ON PLANS ARE MINIMUM ONLY. ROOF DESIGN DEAD LOAD - 15 PSF MINIMUM, ROOF DESIGN WIND UPLIFT - 35 PSF MINIMUM. DESIGN TRUSSES FOR SUPPORT OF DEAD, LIVE, SNOW DRIFT AND WIND LOADS. SUBMIT SHOP DRAWINGS SHOWING TRUSSES AND ERECTION BRACING SIZES AND CONNECTIONS. SHOP DRAWINGS AND DESIGN CALCULATIONS BOTH STAMPED BY A PROFESSIONAL ENGINEER LICENSED IN STATE OF ALASKA. PROVIDE DRAWINGS FOR ERECTION AND PERMANENT BRACING.

MISCELLANEOUS:

DRAWINGS INDICATE GENERAL AND TYPICAL DETAILS OF CONSTRUCTION. WHERE CONDITIONS ARE NOT SPECIFICALLY INDICATED BUT ARE OF SIMILAR CHARACTER TO DETAILS SHOWN, SIMILAR DETAILS OF CONSTRUCTION SHALL BE USED SUBJECT TO REVIEW AND APPROVAL BY THE ARCHITECT AND STRUCTURAL ENGINEER.

REFER TO ARCHITECTURAL DRAWINGS FOR WALL OPENINGS

11 X 17 SHEET IS HALF SCALE

MRV ARCHI
1420 GLACIER A
JUNEAU, AK
907-586-1
FAX 907-46
mrv@mrvarchit

WRANGELL CARVING SHED
Wrangell Cooperative Association and Alaska Native Sisterhood

SHEET TITLE:
GENERAL

DATE: SEPTEMBE
SCALE:
DRAWN:
CHECKED:

SHEET NO.
S0

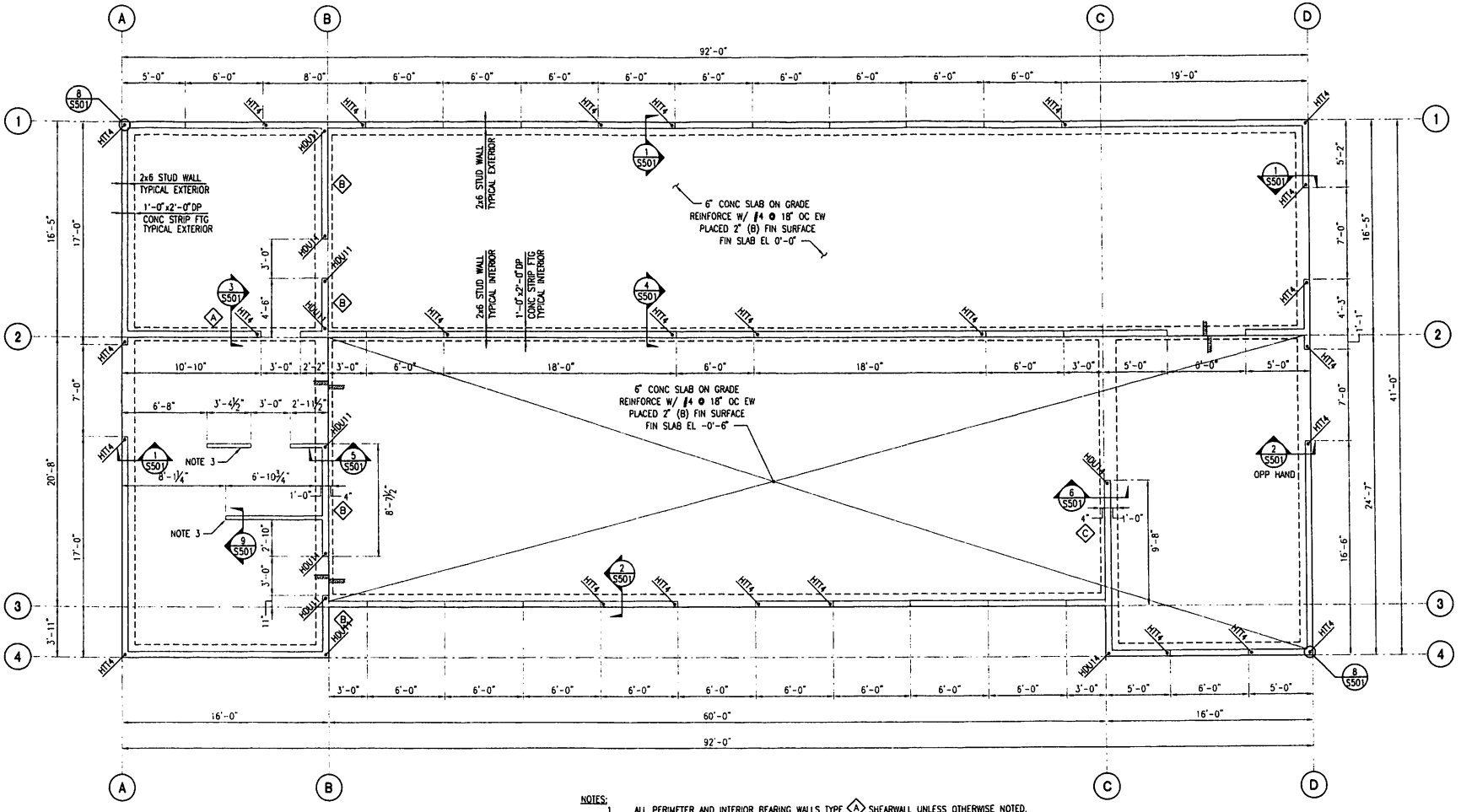

NOTES:

1. ALL PERIMETER AND INTERIOR BEARING WALLS TYPE (A) SHEARWALL UNLESS OTHERWISE NOTED. SEE SHEARWALL SCHEDULE 11/S501.
2. HOLDOWNS HTT4, HDU11 AND HDU14 BY SIMPSON LOCATED AS INDICATED. SEE HOLDOWN SCHEDULE 12/S501.
3. NON-SHEAR LOAD BEARING WALL 2x4 STUDS AT 16" OC.
4. PROVIDE SLAB CRACK CONTROL JOINTS AT 16'-0" OC MAXIMUM EACH WAY PER 7/S501.
5. SEE 4/S511 FOR REINFORCING DEVELOPMENT AND SPLICE LENGTHS.

1 FOUNDATION PLAN

Scale: 1/4"=1'-0"

11 X 17 SHEET IS HALF SCALE

MRV ARCHI
1420 GLACIER A
JUNEAU, AK
907-586-1
FAX 907-46.
mrv@mrvarchit

WRANGELL CARVING SHED

Wrangell Cooperative Association and Alaska Native Sisterhood

SHEET TITLE:
FOUNDATIC
PLAN

DATE: SEPTEMBE
SCALE:
DRAWN:
CHECKED:

SHEET NO.
S10

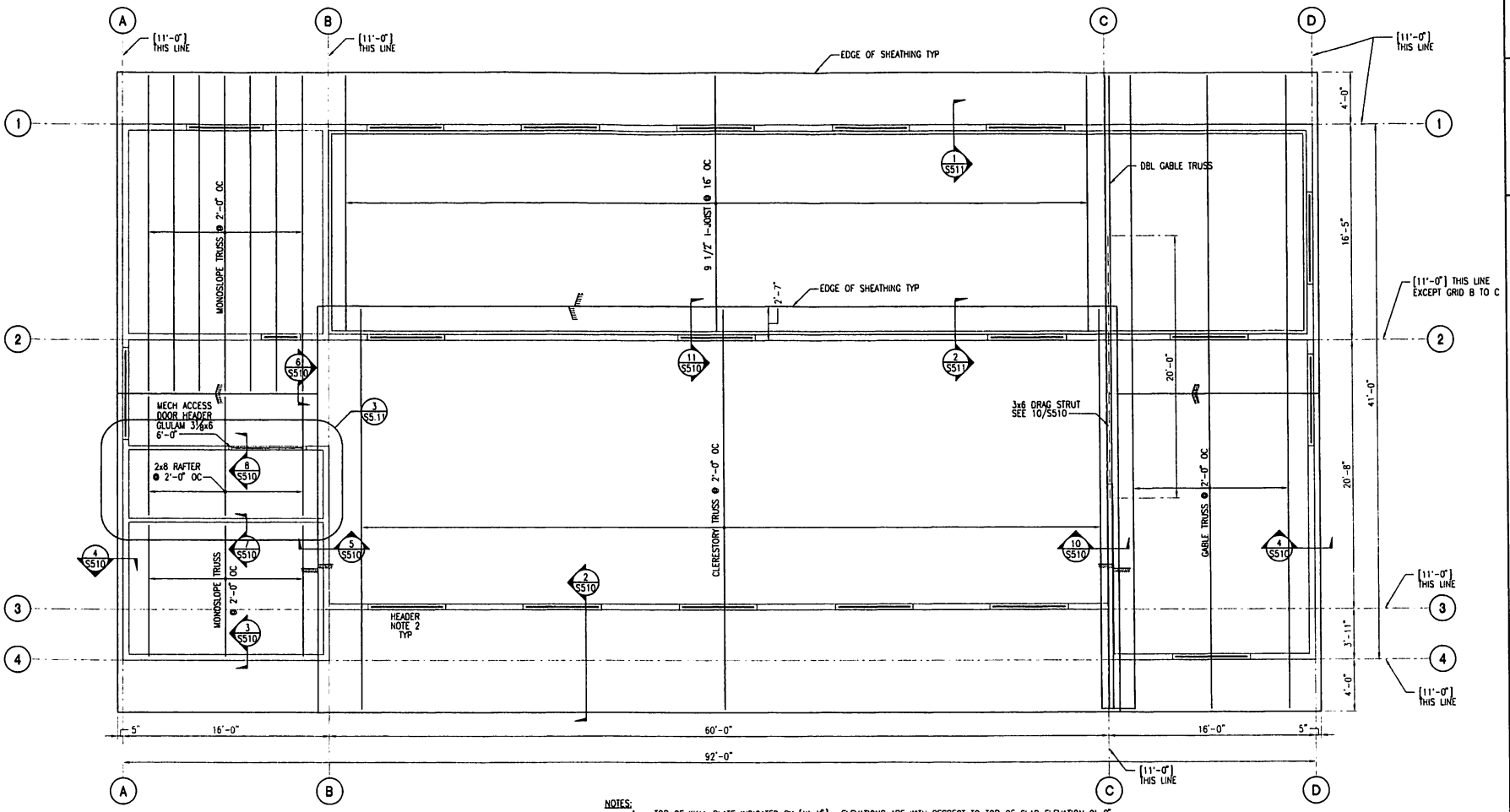

NOTES:
1. TOP OF WALL PLATE INDICATED BY [X'-Y"]. ELEVATIONS ARE WITH RESPECT TO TOP OF SLAB ELEVATION 0'-0".
2. SEE 1/S510 FOR HEADER DETAIL.
3. ROOF TRUSSES ARE MANUFACTURED 2x METAL SIDE PLATE CONNECTED.

1 ROOF PLAN
Scale: 1/4"=1'-0"

11 X 17 SHEET IS HALF SCALE

MRV ARCHI
1420 GLACIER A
JUNEAU, AK
907-586-1
FAX 907-46.
mrv@mrvarchit

WRANGELL CARVING SHED

Wrangell Cooperative Association and Alaska Native Sisterhood

SHEET TITLE:
ROOF PLAN

DATE: SEPTEMBE
SCALE:
DRAWN:
CHECKED:

SHEET NO.
S1C

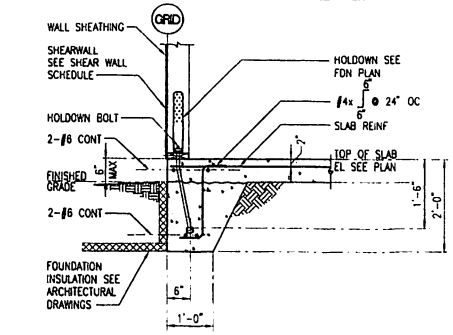

1 PERIMETER FOOTING
SCALE: 3/4" = 1'-0"

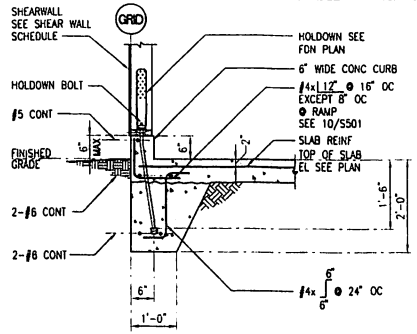

2 PERIMETER CURB
SCALE: 3/4" = 1'-0"

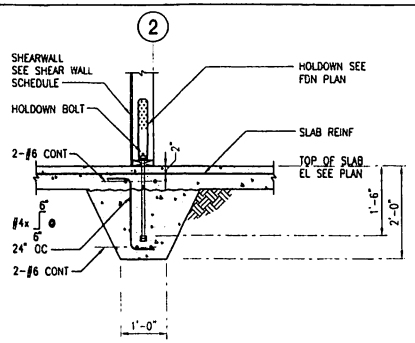

3 INTERIOR FOOTING GRID 2
SCALE: 3/4" = 1'-0"

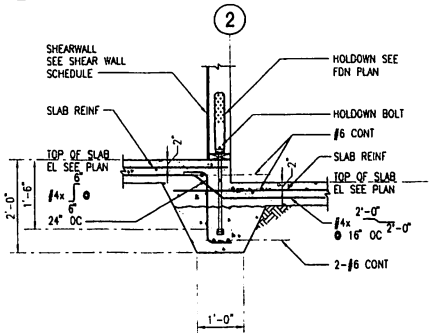

4 INTERIOR FOOTING GRID 2
SCALE: 3/4" = 1'-0"

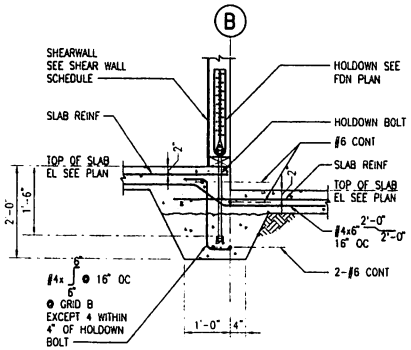

5 INTERIOR FOOTING GRID B
SCALE: 3/4" = 1'-0"

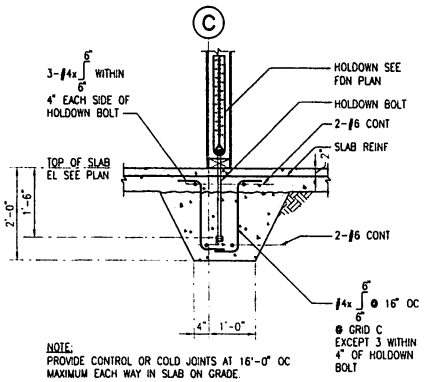

NOTE:
PROVIDE CONTROL OR COLD JOINTS AT 16'-0" OC MAXIMUM EACH WAY IN SLAB ON GRADE.

6 INTERIOR FOOTING GRID C
SCALE: 3/4" = 1'-0"

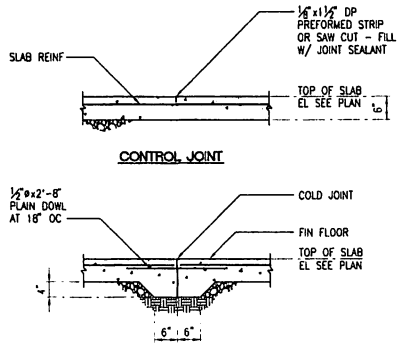

7 COLD JOINT
SCALE: 3/4" = 1'-0"

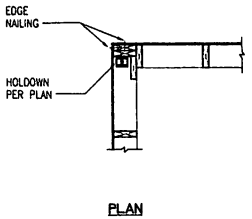

8 HOLDOWN AT CORNER
SCALE: 3/4" = 1'-0"

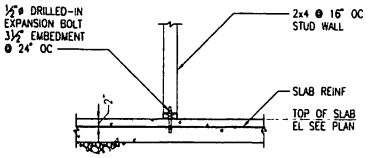

9 NON-SHEAR BEARING WALL
SCALE: 3/4" = 1'-0"

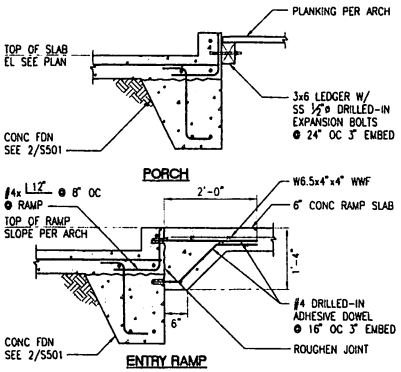

10 PORCH/RAMP TO FOUNDATION
SCALE: 3/4" = 1'-0"

SHEAR WALL SCHEDULE

TYPE	SHEATHING	PANEL EDGE NAILING	FRAMING AT PANEL JOINTS	SILL ATTACHMENTS (NOTE 7)
A	ONE SIDE	8d @ 6" OC	2x	2x SILL, 5/8" AB @ 48"
B	ONE SIDE	8d @ 3" OC	3x	3x SILL, 5/8" AB @ 30"
C	TWO SIDES	8d @ 3" OC	3x	3x SILL, 5/8" AB @ 16"

NOTES:
1. PROVIDE 3"x3"x1/4" PLATE WASHERS ON TOP OF ALL SILL PLATES AT ANCHOR BOLTS.
2. SHEATHING SQUARE EDGED OSB.
3. SIMPSON HOLDOWNS AND STRAPS ARE INDICATED ON PLANS.
4. PROVIDE 2x FLAT BLOCKING AT HORIZONTAL JOINTS BETWEEN STUDS.
5. SHEATHING MAY BE INSTALLED EITHER VERTICAL OR HORIZONTAL
6. PROVIDE PANEL EDGE NAILING AT STUDS WITH HOLDOWNS.

11 SHEAR WALL SCHEDULE
SCALE: NTS

HOLDOWN SCHEDULE

HOLDOWN	HOLDOWN STUD	HOLDOWN BOLT DIA.
HTT4	2-2x	5/8"
HDU11	PSL 5 1/4x5 1/4	1"
HDU14	PSL 5 1/4x7	1"

NOTES:
1. ALL ANCHOR BOLTS SHALL BE GALVANIZED 1554 (36).
2. NAIL DOUBLE 2X STUDS TOGETHER WITH 10d AT 4" ON CENTER STAGGERED.
3. SIMPSON HARDWARE INSTALLED PER MANUFACTURER'S INSTRUCTIONS.

12 HOLDOWN ANCHOR BOLTS
SCALE: NTS

11 X 17 SHEET IS HALF SCALE

MRV ARCHI
1420 GLACIER A
JUNEAU, AK
907-586-1
FAX 907-46
mrv@mrvarchit

WRANGELL CARVING SHED

Wrangell Cooperative Association and Alaska Native Sisterhood

SHEET TITLE:
FOUNDATI DETAILS

DATE: SEPTEMBE
SCALE:
DRAWN:
CHECKED:

SHEET NO.
S5

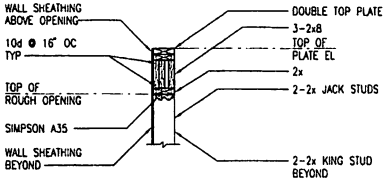

1 HEADER
SCALE: 3/4" = 1'-0"

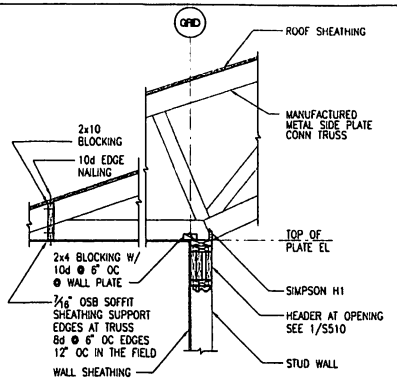

2 SHEAR TRANSFER AT TRUSS CONNECTION
SCALE: 3/4" = 1'-0"

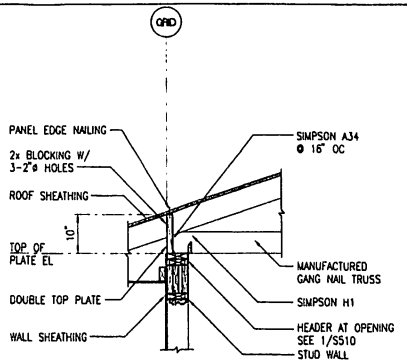

3 TRUSS AT WALL
SCALE: 3/4" = 1'-0"

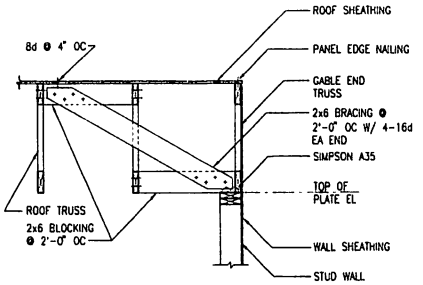

4 GABLE END TRUSS
SCALE: 3/4" = 1'-0"

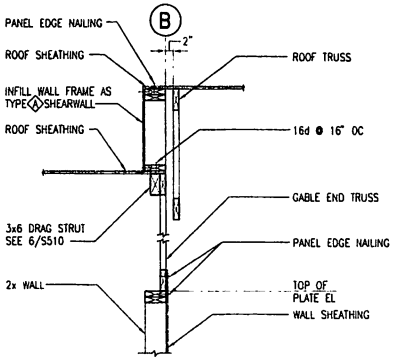

5 GRID B SHEARWALL AT TRUSS
SCALE: 3/4" = 1'-0"

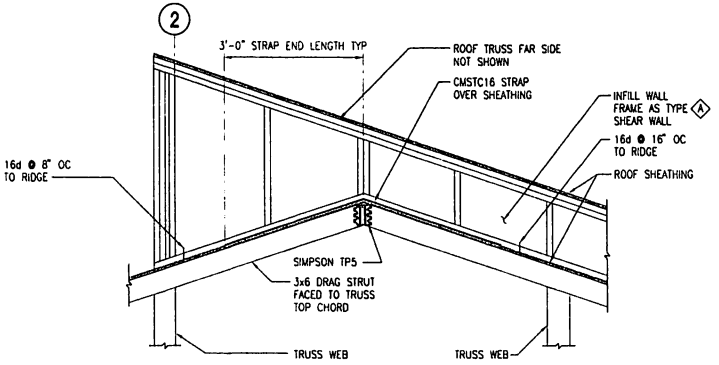

6 DRAG TIE AT RIDGE
SCALE: 3/4" = 1'-0"

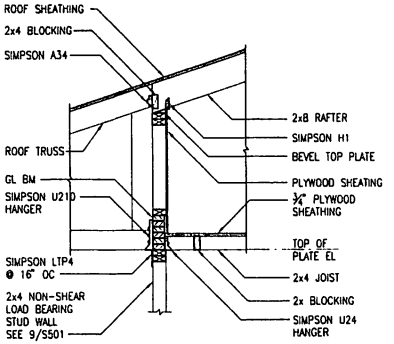

7 TRUSS/RAFTER AT BEARING WALL
SCALE: 3/4" = 1'-0"

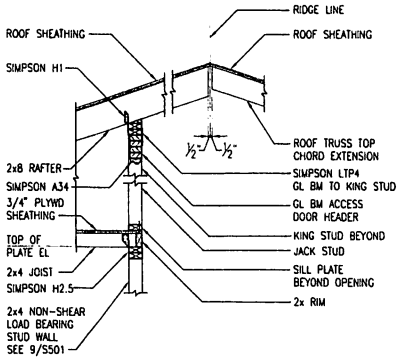

8 RAFTER AT BEARING WALL
SCALE: 3/4" = 1'-0"

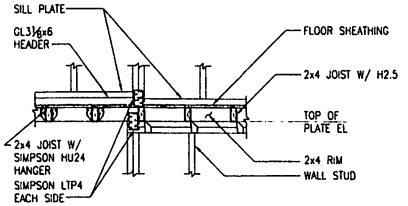

9 HEADER AT WALL END
SCALE: 3/4" = 1'-0"

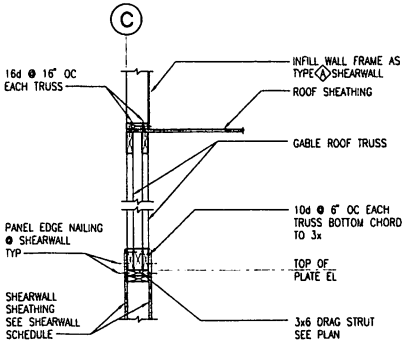

10 DRAG STRUT GRID C
SCALE: 3/4" = 1'-0"

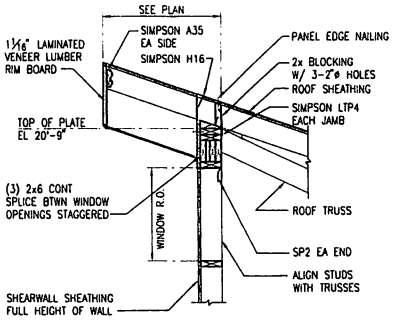

11 TRUSS AT CLERESTORY WALL
SCALE: 3/4" = 1'-0"

11 X 17 SHEET IS HALF SCALE

MRV ARCHI
1420 GLACIER A
JUNEAU, AK
907-586-1
FAX 907-46
mrv@mrvarchit

WRANGELL CARVING SHED

Wrangell Cooperative Association and Alaska Native Sisterhood

SHEET TITLE:
FRAMING DETAILS

DATE: SEPTEMBE
SCALE:
DRAWN:
CHECKED:

SHEET NO.
S5

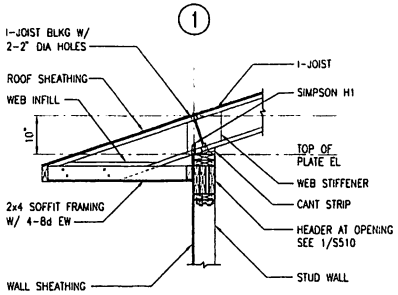

1 I-JOIST AT EXTERIOR WALL
SCALE: 3/4" = 1'-0"

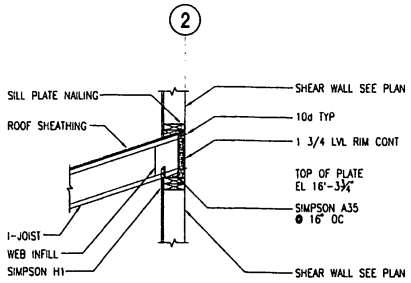

2 I-JOIST AT INTERIOR WALL
SCALE: 3/4" = 1'-0"

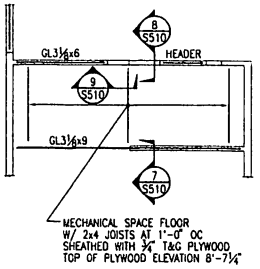

3 MECHANICAL FLOOR PLAN
SCALE: 1/4" = 1'-0"

f'c = 3,000 PSI		
BAR SIZE	L_D	L_S
#3	17	23
#4	22	29
#5	28	37
#6	33	43

NOTE:

L_D: TENSION DEVELOPMENT LENGTH (INCHES)
L_S: LAP SPLICE LENGTH = 1.3 x L_D (INCHES)

4 REINF DEVELOPMENT AND SPLICE LENGTH
SCALE: NTS

11 X 17 SHEET IS HALF SCALE

MRV ARCHI
1420 GLACIER A
JUNEAU, AK
907-586-1
FAX 907-46
mrv@mrvarchit

WRANGELL CARVING SHED
Wrangell Cooperative Association and Alaska Native Sisterhood

SHEET TITLE:
FRAMING DETAILS

DATE: SEPTEMBE
SCALE:
DRAWN:
CHECKED:

SHEET NO.
S5

SYMBOLS

	CW	COLD WATER
	HW	HOT WATER
	V	VENT
	W	WASTE, SOIL, DRAINAGE
		CHECK VALVE
		UNION
		GLOBE VALVE OR ISOLATING BALL VALVE
		BALL VALVE
	DV	DRAIN VALVE
		PITCHED DOWN
		REDUCER
		CAPPED OR PLUGGED
	CO	CLEANOUT
	FCO	FLOOR CLEANOUT
1		CONSTRUCTION NOTE
		THERMOSTAT – IMMERSION, ROOM
		THERMOMETER
$		CONTROL SWITCH
#		DIAMETER
℄		CENTER LINE
A		ACCESS DOOR
	B	MANUAL BUTTERFLY DAMPER
		CEILING EXHAUST GRILLE
		CEILING SUPPLY GRILLE
		RECTANGULAR TO ROUND DUCT TRANSITION
		EXHAUST DUCT UP, DOWN
		SUPPLY DUCT UP, DOWN

AFF	ABOVE FINISHED FLOOR
C	COMMON
CFM	CUBIC FEET PER MINUTE
CO	CLEANOUT
DU	DIELECTRIC UNION
DV	DRAIN VALVE
EA	EXHAUST AIR
EC	EXHAUST CAP
EG	EXHAUST GRILLE
ESP	EXTERNAL STATIC PRESSURE
ET	EXPANSION TANK
FCO	FLOOR CLEANOUT
FD	FLOOR DRAIN
HRV	HEAT RECOVERY VENTILATOR
HWT	HOT WATER TANK
IAW	IN ARCHITECTURAL WORK
IEW	IN ELECTRICAL WORK
KW	KILOWATT
L	LAVATORY
MAT	MIXED AIR TEMPERATURE
MBH	1,000 BTU PER HOUR
NIC	NOT IN CONTRACT
NIM	NOT IN MECHANICAL
OAD	OUTSIDE AIR DAMPER
OC	ON CENTER
OSA	OUTSIDE AIR
S	SINK
SA	SUPPLY AIR
SG	SUPPLY GRILLE
SH	SHOWER
TP	TRAP PRIMER
TSP	TOTAL STATIC PRESSURE
TYP	TYPICAL
T&P	TEMPERATURE AND PRESSURE
VTR	VENT THROUGH ROOF
WC	WATER CLOSET
WCO	WALL CLEAN OUT
WH	WALL HYDRANT
WHA	WATER HAMMER ARRESTOR
YCO	YARD CLEANOUT

MECHANICAL NOTES:

1. CODES & REGULATIONS: ALL WORK HEREUNDER SHALL BE STRICTLY IN CONFORMANCE WITH APPLICABLE CODES AND REGULATIONS. ALL WORK SHALL BE IN ACCORDANCE WITH THE 2009 INTERNATIONAL BUILDING CODE, 2009 INTERNATIONAL MECHANICAL CODE, 2009 UNIFORM PLUMBING CODE, NFPA, AND STATE OF ALASKA MODIFICATIONS. ALL ELECTRICAL EQUIPMENT SHALL BEAR THE UL LABEL. ALL SHEET METAL WORK TO BE DONE WITH GALVANIZED SHEET METAL AND IN ACCORDANCE WITH SMACNA REQUIREMENTS. PROVIDE ALL TESTING REQUIREMENTS FOR MECHANICAL SYSTEMS AS REQUIRED AND WITNESSED BY ADMINISTRATIVE AUTHORITY. COORDINATE AND PROVIDE ALL REQUIREMENTS FOR CONNECTION TO CITY WATER AND SEWER SERVICES. SEAL ALL PENETRATIONS AIRTIGHT. INSTALL ESCUTCHEONS ON ALL EXPOSED DUCT AND PIPE PENETRATIONS.
2. INSTALLATION OF PLUMBING SYSTEMS SHALL BE IN ACCORDANCE WITH CROSS CONNECTION REQUIREMENTS OF CHAPTER 6 OF UPC. DOMESTIC WATER PIPING SHALL BE TYPE L COPPER. ADJUST AND SET TEMPERING VALVE TO DELIVER 115F HOT WATER TO FIXTURES – VERIFY IN WRITING.
3. VENTILATION: MECHANICAL VENTILATION IS TO BE PROVIDED AS SHOWN HEREUNDER AND AS REQUIRED BY IMC. VENTILATION IS TO BE PROVIDED BY HRV-1 WHICH IS TO OPERATE CONTINUOUSLY AT MEDIUM SPEED UNLESS THE REMOTE HUMIDITY CONTROLLER OVERRIDES THE SPEED. TEST AND BALANCE SYSTEM, PROVIDE STANDARD ADJUSTMENT LOG.
4. INSULATE ALL DOMESTIC WATER PIPING, FITTINGS, AND VALVES WITH 1-INCH THICK PREFORMED FIBERGLASS INSULATION WITH ALL PURPOSE FLAME RETARDANT JACKET AND PVC COVERS. INSULATE VENT PIPING FOR LAST FIVE FEET PRIOR TO ROOF PENETRATION AND IN COLD ATTIC SPACE SAME AS DOMESTIC PIPING. INSULATE ALL DUCTWORK IN COLD ATTIC SPACES ABOVE TOILETS WITH 1-1/2 INCH THICK FLEXIBLE FIBERGLASS WITH FOIL VAPOR BARRIER FACING. SEAL PIPE AND DUCT INSULATION JOINTS.
5. HEATING IS BY ELECTRIC HEATING UNITS; SEE ELECTRICAL DRAWINGS.
6. FIRE SUPPRESSION: PROVIDE A DRY PIPE SPRINKLER SYSTEM FOR ENTIRE FACILITY MEETING NFPA 13 AND STATE OF ALASKA REQUIREMENTS. SPRINKLER ALL AREAS INCLUDING COLD ATTIC SPACES. COORDINATE CONFIGURATION AND LOCATION OF PIPING AND HEADS WITH ARCHITECTURAL FEATURES FOR AESTHETICALLY ACCEPTABLE INSTALLATION. PROVIDE SHOP DRAWINGS, PRODUCT DATA, AND CALCULATIONS FOR APPROVAL TO PROJECT MANAGER AND TO STATE FIRE MARSHALL. PROVIDE COMPLETE SUBMITTAL DATA CALCULATIONS AND AS-BUILTS OF SPRINKLER SYSTEM UPON COMPLETION. TEST AND CERTIFY SYSTEM INCLUDING BACKFLOW PREVENTER AS REQUIRED.
7. PROVIDE TRAINING FOR ALL MECHANICAL AND SPRINKLER SYSTEMS WHEN COMPLETED.
8. PROVIDE O&M MANUALS AND AS-BUILT PRINTS OF MECHANICAL, SPRINKLER, AND CONTROLS SYSTEMS.
9. PROVIDE ONE YEAR WARRANTY OF MECHANICAL SYSTEMS FROM FINAL COMPLETION DATE.
10. PROVIDE A COMPLETE AND OPERATING MECHANICAL SYSTEM AS INTENDED AND SHOWN.

PLUMBING EQUIPMENT SCHEDULE

EQUIPMENT	DESIGN MANUFACTURER	FEATURES/CONTROLS/OPTIONS
WATER CLOSET, WC	KOHLER AMERICAN STANDARD	FLOOR MOUNTED PRESSURE ASSIST TANK TYPE. VITREOUS CHINA. ELONGATED BOWL WITH OPEN FRONT SEAT AND CHECK HINGES. 17-1/2" HIGH BOWL. ADA COMPLIANT. COORDINATE TRIP LEVER LOCATION FOR ACCESSIBILITY AND ADA REQUIREMENTS. 1/2-INCH IPS WHEEL HANDLE ISOLATION VALVE AND FLEXIBLE RISER.
LAVATORY, L	KOHLER DELTA (FAUCET TRIM)	WALL MOUNTED 21"x18" VITREOUS CHINA LAVATORY. STEEL SUPPORT HANGER. 4-INCH FAUCET CENTERS, GRID TYPE STRAINER WITH OFFSET WASTE. TWO INDEXED HOT AND COLD BLADE HANDLES WITH QUARTER TURN CARTRIDGES. 3-INCH LONG SPOUT. SOLID BRASS BODY WITH CHROME FINISH. FLOW CONTROL AERATOR, 2.0 GPM. FIXTURE WITH VITREOUS CHINA SHROUD COVERING ALL PIPING. ADA COMPLIANT. 1/2-INCH IPS WHEEL HANDLE ISOLATION VALVE AND FLEXIBLE RISER. INSULATION SHIELDS INSTALLED ON HOT, COLD WATER, AND WASTE PIPING BELOW LAVATORY.
SINK, S	ELKAY JUST DELTA (FAUCET TRIM)	SINGLE COMPARTMENT STAINLESS STEEL SINK, SELF-RIMMING, LEDGEBACK. 18 GAGE FULLY UNDERCOATED, PREPUNCHED 18 GAGE STAINLESS STEEL. 25"x22"x5-1/2" DEEP. CRUMBCUP STRAINER AND OFFSET WASTE. SWIVEL GOOSENECK FAUCET (5-1/2 INCH REACH, 9-1/2 INCH DECK TO AERATOR). SOLID BRASS BODY WITH CHROME FINISH. FLOW CONTROL AERATOR, 2 GPM. 1/2-INCH IPS WHEEL HANDLE ISOLATION VALVE AND FLEXIBLE RISER. WRIST BLADE FAUCET HANDLES WITH QUARTER TURN CARTRIDGES. ADA COMPLIANT. INSULATION SHIELDS INSTALLED ON HOT, COLD WATER, AND WASTE PIPING BELOW LAVATORY.
SHOWER, SH-1	LASCO AQUABATH (C4136BF) POWERS HYDROGUARD (E700)	SINGLE PIECE UNIT TO FIT IN A 41"X37" ROUGH OPENING. INCLUDE ANTIBACTERIAL SHOWER CURTAIN, HOOKS, ROD, ADJUSTABLE HEIGHT SHOWER HEAD, AND DRAIN. PRESSURE BALANCING/TEMPERATURE LIMITING MIXING VALVE. ADA COMPATIBLE, INCLUDE OPTIONAL THRESHOLD DAM. COORDINATE CONFIGURATION OF ADA FIXTURE WITH ACTUAL LOCATION. COORDINATE RECESSING OF FIXTURE IF APPLICABLE.
FLOOR DRAIN, FD	ZURN JOSAM	6" DIAMETER
FLOOR SINK, FS	ZURN JOSAM	PORCELAIN ENAMEL 4"x8"x8" DEEP FLOOR SINK WITH SECONDARY STRAINER. 3" OUTLET. 4" SUMP DEPTH. HALF GRATE. WITH TRAP PRIMER CONNECTION.
WALL HYDRANT, WH	ZURN JOSAM	3/4" NON-FREEZE TYPE IN RECESSED BOX, WITH INTEGRAL VACUUM BREAKER.
HOT WATER TANK, HWT-1	STATE ES6 40 DOCT	40 GALLON, GLASS LINED, 4500 W ELEMENT, 240 VOLT, SINGLE PHASE, HIGH EFFICIENCY, TALL MODEL, 2-1/2" THICK FOAM INSULATION, ANODE ROD, T&P RELIEF VALVE. ENERGY FACTOR OF 0.93.
DRINKING FOUNTAIN, DF-1	HAWS ELLER	DUAL DRINKING FOUNTAIN, ROUND BOWLS, ADA COMPATIBLE, ADA APRON, WALL BRACKET IF REQUIRED.
EXPANSION TANK, ET	AMTROL THERM-X-TROL ST-5	FOR POTABLE WATER AND THERMAL EXPANSION. 2 GALLON VOLUME.
THERMOSTATIC TEMPERING VALVE, TV	POWERS LM431	TEMPERATURE ACTIVATED MIXING VALVE, INTEGRAL STOP CHECKS.

FAN SCHEDULE

EQUIPMENT	AREA SERVED	CFM SA/EA	SP. INCHES OF WATER	MANUFACTURER AND MODEL	MIN. HP	VOLTS/ PHASE	FEATURES AND ACCESSORIES
HRV	BUILDING VENTILATION	900/900	0.4" ESP	LIFEBREATH 1200	(2)1/4 HP	120V/1ø	MODULAR ALUMINUM HEAT RECOVERY COIL FOR CROSS FLOW EXCHANGE. WASHABLE FILTERS ON OSA AND EA. TWO MOTORS, DOUBLE SHAFTS. 3 SPEED BLOWER CONTROL. CONDENSATE DRAIN PAN/CONNECTIONS. DEFROST CONTROL TO INTERRUPT SUPPLY FAN OPERATION. REMOTE WALL MOUNTED DEHUMIDISTAT.

VENTILATION EQUIPMENT SCHEDULE

EQUIPMENT	MANUFACTURER	MODEL	CAPACITY/SIZE (INCHES)	FEATURES/CONTROLS/OPTIONS
EXHAUST GRILLE, EG	TITUS	350FL	SEE SCHEDULE	STEEL BORDER, 3/4" SPACING, 30 DEGREE BLADES, 4-WAY DISCHARGE. OPPOSED BLADE DAMPER.
SUPPLY GRILLE, SG	TITUS	300RL	SEE SCHEDULE	STEEL 4-WAY ADJUSTABLE DISCHARGE. OPPOSED BLADE DAMPER.
EXHAUST & INTAKE CAP	CARNES	QI	18x18	LOW CONTOUR, RECTANGULAR TYPE. HOOD OUTLET FREE AREA TO BE MINIMUM TWICE THROAT AREA.
HEATING COIL, HC-1	NEPTRONIC	DF C100H	10.0KW 18x12x8	DUCT MOUNTED, RECTANGULAR TYPE, AIR FLOW SWITCH, 800 CFM, 350 FPM VELOCITY, 240 VOLT SINGLE PHASE, ADJUSTABLE SUPPLY AIR THERMOSTAT SET AT 65F.

DIFFUSER AND GRILLE SCHEDULE

	SUPPLY CEILING DIFFUSER/WALL GRILLE					EXHAUST GRILLE				
ROOM	MARK	NUMBER	SUPPLY CFM	FACE SIZE (INCHES)	NECK SIZE (INCHES)	MARK	NUMBER	EXHAUST CFM	FACE SIZE (INCHES)	NECK SIZE (INCHES)
MEN RESTROOM	–	–	–	–	–	EG	1	120	8x8	8x8
RROOM	–	–	–	–	–	EG	1	60	6x6	6x6
CARVING SPACE	SG	2	175	14x6	14x6	EG	2	150	12x6	12x6
TRAINING	SG	1	200	14x6	14x6	EG	1	120	12x6	12x6
OFFICE	SG	1	100	6x6	6x6	–	–	–	–	–
TOTEM ROOM	SG	2	125	12x6	12x6	EG	2	150	12x6	12x6

DRAWING INDEX

Sheet Number	Sheet Title
M001	SYMBOLS & SCHEDULES
M101	FOUNDATION PLAN
M201	FLOOR PLAN
M202	ENLARGED PLANS
M300	PLUMBING DIAGRAM
M301	DETAILS

MURRAY & ASSOCIATES, P. C.
CONSULTING ENGINEERS
P O BOX 21081 TEL: 907 780-6151
JUNEAU, ALASKA 99802 FAX: 907 780-6182

11 X 17 SHEET IS HALF SCALE

STATE OF ALASKA 49th
DOUGLAS H. MURRAY
ME 7870
ELECTRICAL PROFESSIONAL ENGINEER
ISSUE DATE: 10-09-2013

MRV ARCHITECT
1420 GLACIER AVE.
JUNEAU, AK 998
907-586-1371
FAX 907-463-554
mrv@mrvarchitects.

WRANGELL CARVING SHED

Wrangell Cooperative Association and Alaska Native Sisterhood

CONSTRUCTION DOCUMENTS

SHEET TITLE:
SYMBOLS & SCHEDULES

DATE: SEP. 10,
SCALE:
DRAWN:
CHECKED:

SHEET NO.
M0C

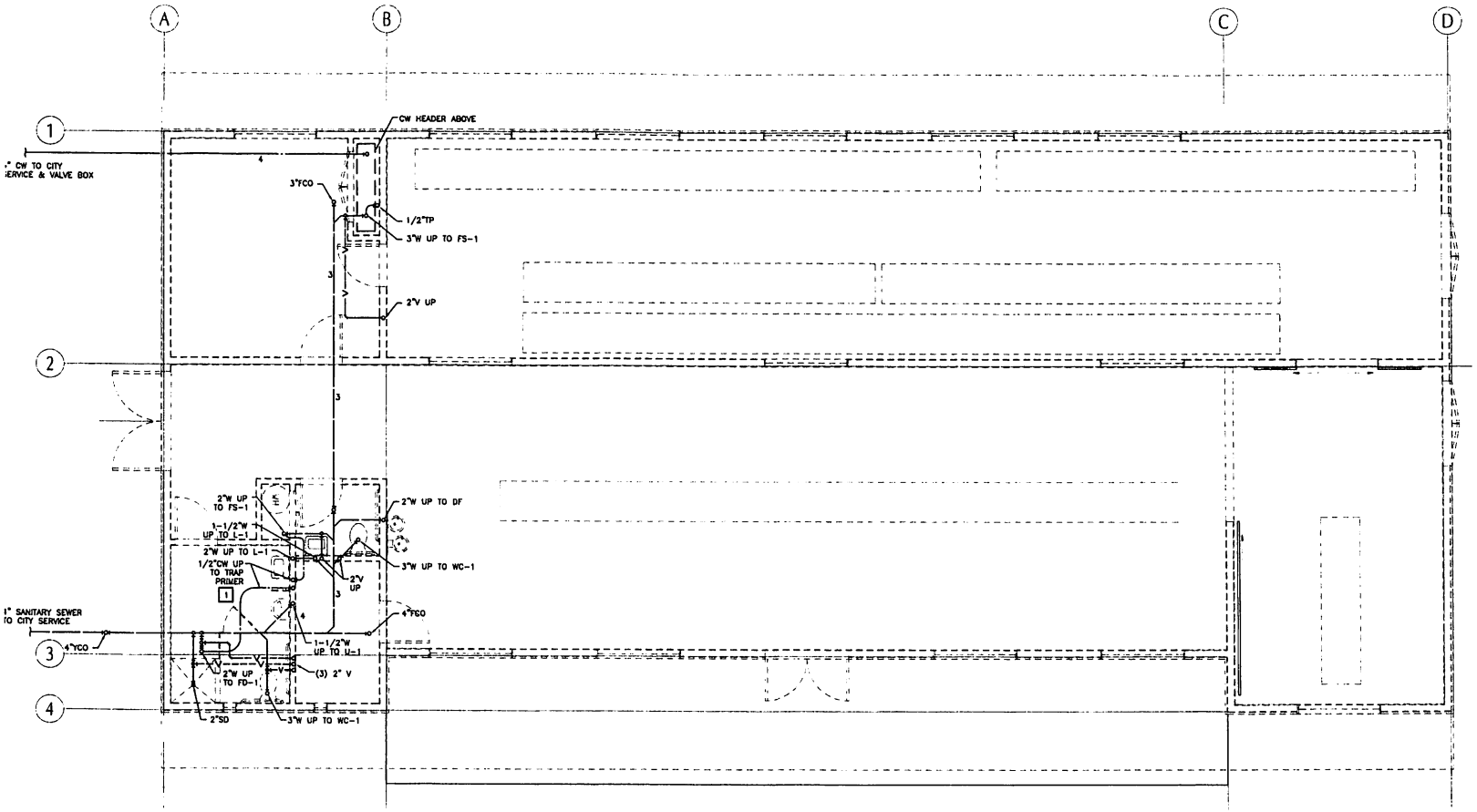

1 FOUNDATION PLAN

SCALE: 0 2' 4' 8'

PROJECT NORTH

CONSTRUCTION NOTES:

1 TYPE K COPPER.

SHEET NOTES:

1. SEE DIAGRAM ON SHEET M300 FOR PIPING CONFIGURATION AND SIZING.

MURRAY & ASSOCIATES, P. C.
CONSULTING ENGINEERS
P O BOX 21081 TEL: 907 780-6151
JUNEAU, ALASKA 99802 FAX: 907 780-6152

11 X 17 SHEET IS HALF SCALE

MRV ARCHITECT
1420 GLACIER AVE.
JUNEAU, AK 998
907-586-1371
FAX 907-463-554
mrv@mrvarchitects.

WRANGELL CARVING SHED

Wrangell Cooperative Association and Alaska Native Sisterhood

CONSTRUCTION DOCUMENTS

SHEET TITLE:
FOUNDATION

DATE: SEP. 10,
SCALE:
DRAWN:
CHECKED:

SHEET NO.
M1C

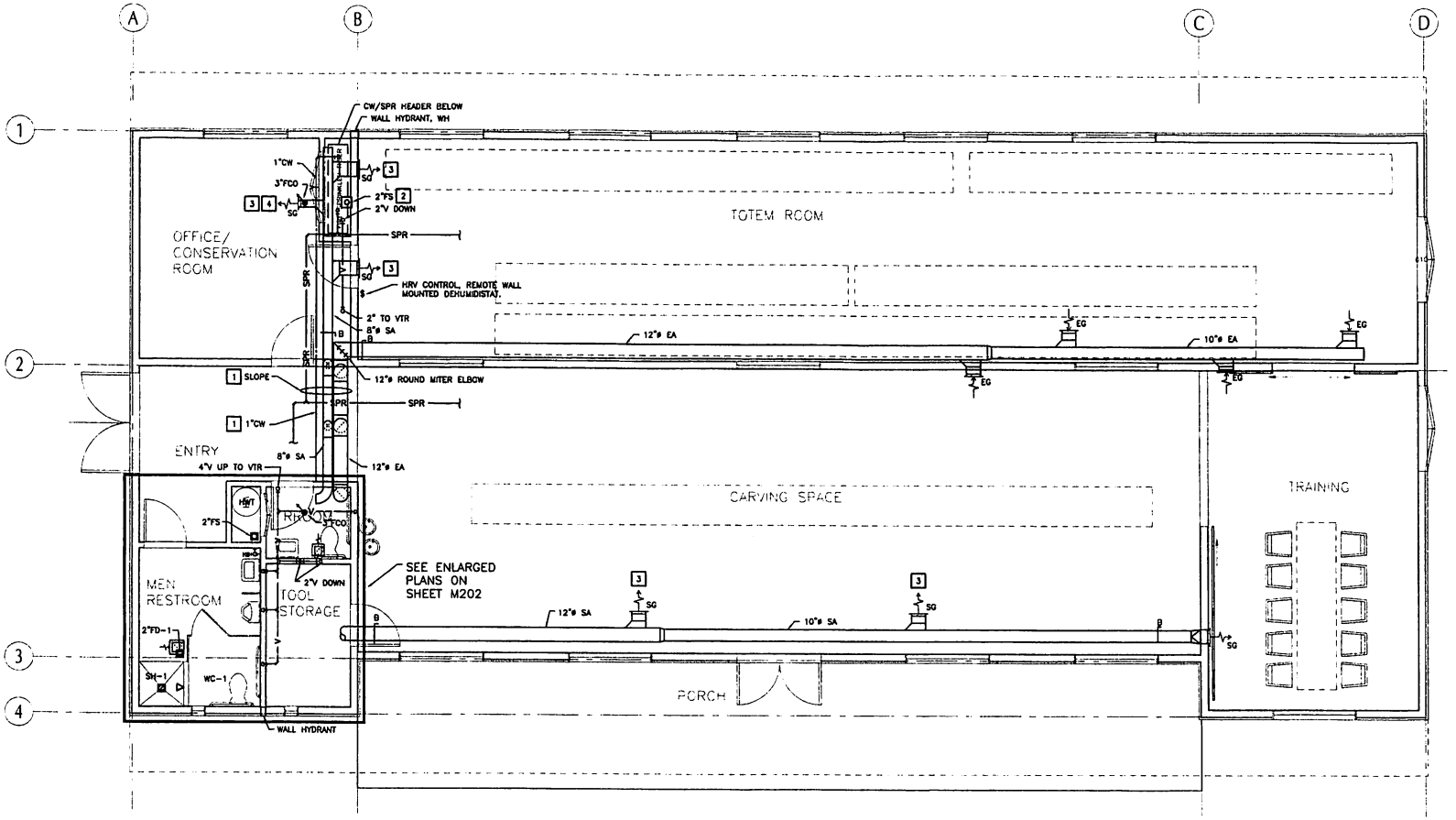

CONSTRUCTION NOTES:

1. INSTALL PIPING AND DUCTWORK AS HIGH AS POSSIBLE AND IN ARCHITECTURAL ENCLOSURE. SLOPE TO MATCH ROOF PITCH.
2. INSTALL FLOOR SINK AND TRAP PRIMER ASSEMBLY. SEE DIAGRAM ON SHEET M300.
3. BRANCH CONNECTION HORIZONTAL. ADJUST 4-WAY VANES FOR WIDE SPREAD.
4. ALIGN SUPPLY GRILLE FLUSH WITH SOFFIT.

1 FLOOR PLAN

SCALE: 0 2' 4' 8'

PROJECT NORTH

SHEET NOTES:

1. SEE DIAGRAM ON SHEET M300 FOR PIPING CONFIGURATION AND SIZING.

MURRAY & ASSOCIATES, P. C.
CONSULTING ENGINEERS
P O BOX 21081 TEL: 907 780-6151
JUNEAU, ALASKA 99802 FAX: 907 780-6152

11 X 17 SHEET IS HALF SCALE

MRV ARCHITECT
1420 GLACIER AVE.
JUNEAU, AK 998
907-586-1371
FAX 907-463-554
mrv@mrvarchitects.

WRANGELL CARVING SHED

Wrangell Cooperative Association and Alaska Native Sisterhood

CONSTRUCTION DOCUMENTS

SHEET TITLE: FLOOR PLAN

DATE: SEP. 10,
SCALE:
DRAWN:
CHECKED:

SHEET NO. M2C

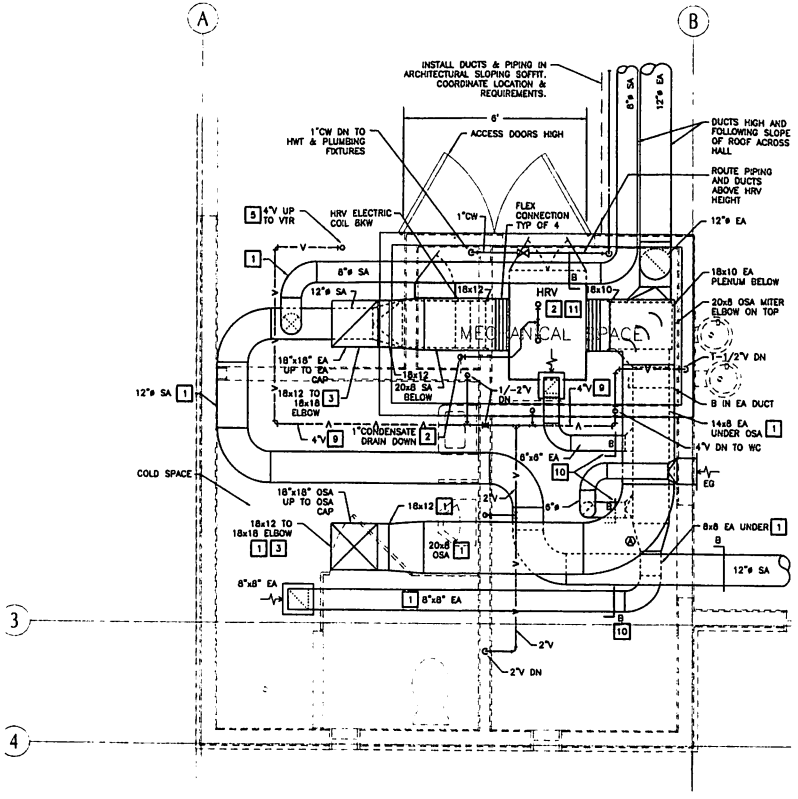

1 MEZZANINE PLAN

SCALE: 0 1' 2' 4'

PROJECT NORTH

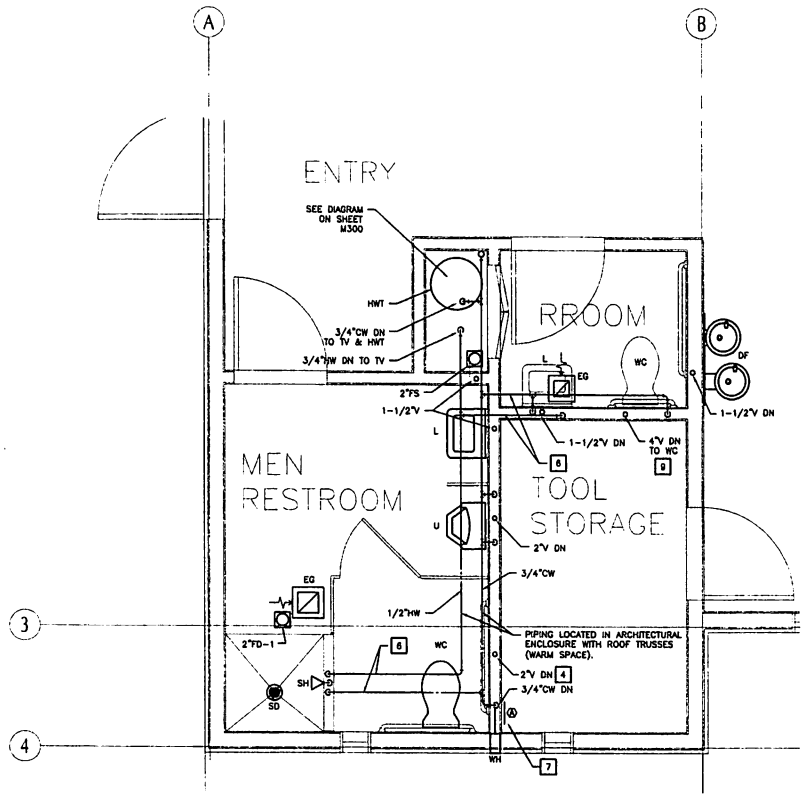

1 TOILET ROOMS

SCALE: 0 1' 2' 4'

PROJECT NORTH

CONSTRUCTION NOTES:

1. INSULATE DUCTWORK IN COLD ATTIC SPACE. INSULATE OSA DUCT & EA FROM CAP TO HRV CONNECTION.
2. INSTALL TRAPS PER MANUFACTURER REQUIREMENTS ON HRV CONDENSATE DRAINS. TERMINATE AT FLOOR SINK BEHIND HOT WATER TANK.
3. EXPANDING MITER ELBOW WITH TURN VANES.
4. 2" COMBINED VENT; JOIN (3) 2" VENTS TOGETHER 12" ABOVE FLOOR.
5. INSULATE IN COLD ATTIC AND LAST FIVE FEET OF VENT PIPING.
6. PIPING IN TRUSSES. NEATLY DRILL MIDDLE THIRD OF TRUSS FOR PIPE PENETRATION INCLUDING 1/2" THICK SPACER. INSTALL PIPE SPACER SUPPORT AT EACH JOIST PENETRATION.
7. INSTALL 3/4" SHUT OFF VALVE TO WH. LOCATE BEHIND 12"x12" ACCESS DOOR.
8. POSITION HRV AND ELECTRIC COIL TO BE FULLY ACCESSIBLE THROUGH ACCESS DOORS.
9. HOUSE VENT, MAINTAIN SIZE FROM FIXTURE TO VTR.
10. PROVIDE EXTENDED ROD AND RECESSED ADJUSTMENT FROM DUCT MANUAL DAMPER.
11. INSTALL DUCT THERMOMETERS (4) ON EACH HRV DUCT INLET/OUTLET.

SHEET NOTES:

1. SEE PLUMBING DIAGRAM ON SHEET M300 FOR CONFIGURATION, ROUTING, AND PIPE SIZING OF DOMESTIC WATER SYSTEM.

MURRAY & ASSOCIATES, P. C.
CONSULTING ENGINEERS
P O BOX 21061 JUNEAU, ALASKA 99802
TEL: 907 780-6151 FAX: 907 780-6152

11 X 17 SHEET IS HALF SCALE

STATE OF ALASKA 49th DOUGLAS H. MURRAY ME 7870 REGISTERED PROFESSIONAL ENGINEER
ISSUE DATE: 10-08-2012

MRV ARCHITECT
1420 GLACIER AVE.
JUNEAU, AK 998
907-586-1371
FAX 907-463-554
mrv@mrvarchitects.

WRANGELL CARVING SHED

Wrangell Cooperative Association and Alaska Native Sisterhood

CONSTRUCTION DOCUMENTS

SHEET TITLE: ENLARGED PLANS

DATE: SEP. 10.
SCALE:
DRAWN:
CHECKED:

SHEET NO. M20

PLUMBING FIXTURE CONNECTION SCHEDULE

FIXTURE	HOT WATER	COLD WATER	WASTE	VENT
WATER CLOSET, WC	–	3/4"	3	2
LAVATORY, L	1/2	1/2	1-1/2	1-1/4
SHOWER SH	1/2	1/2	2	1-1/2
DRINKING FOUNTAIN, DF (2)	–	1/2	1-1/4	1-1/4
URINAL, U	–	1"	2	2
SINK, S	1/2	1/2	2	1-1/2
SHOWER DRAIN	–	–	2	1-1/2
FLOOR DRAIN	–	1/2*	2	1-1/2
FLOOR SINK	–	–	2	1-1/2

* TRAP PRIMER CONNECTION

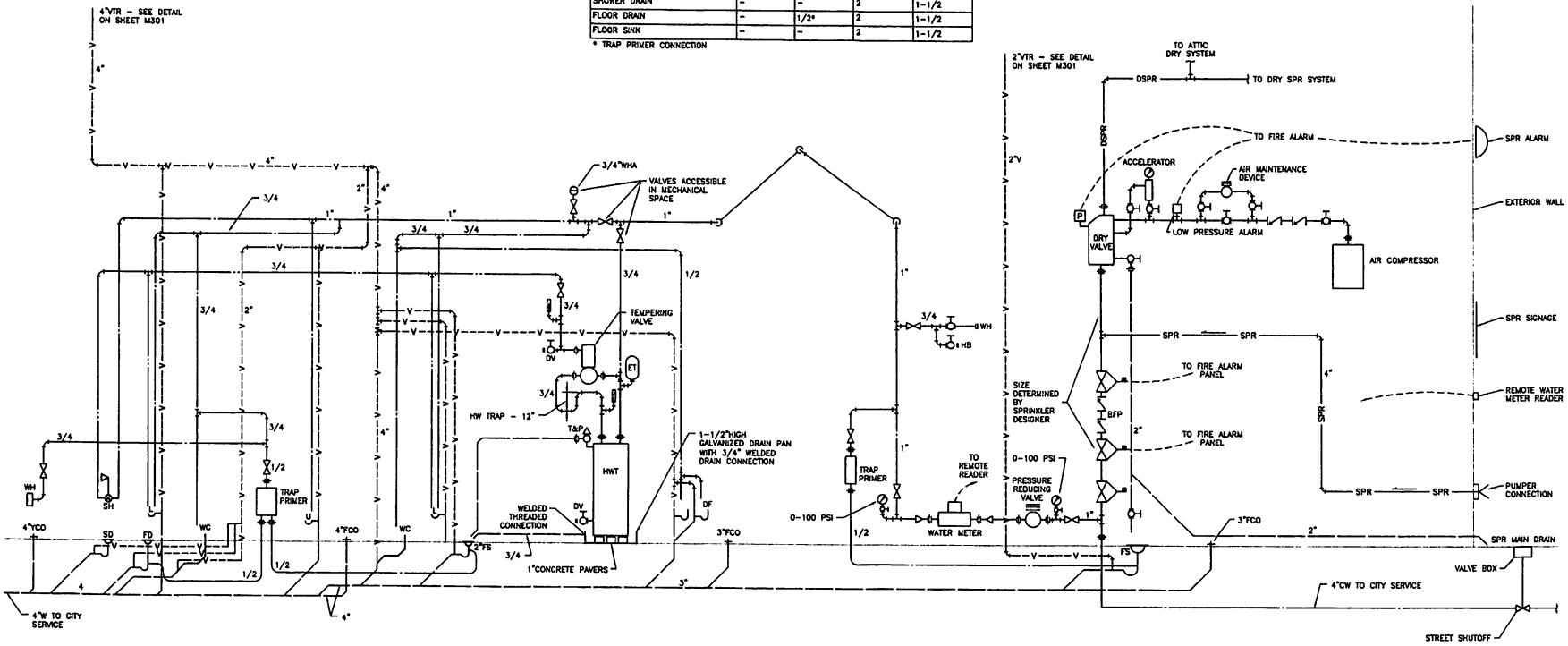

WATER AND SPRINKLER HEADER PIPING DIAGRAM
NO SCALE

MURRAY & ASSOCIATES, P. C.
CONSULTING ENGINEERS
P O BOX 21081 JUNEAU, ALASKA 99802
TEL: 907 780-6151 FAX: 907 780-6182

11 X 17 SHEET IS HALF SCALE

MRV ARCHITECT
1420 GLACIER AVE.
JUNEAU, AK 998
907-586-1371
FAX 907-463-554
mrv@mrvarchitects.

WRANGELL CARVING SHED

Wrangell Cooperative Association and Alaska Native Sisterhood

CONSTRUCTION DOCUMENTS

SHEET TITLE:
PLUMBING DIAGRAM

DATE: SEP. 10,
SCALE:
DRAWN:
CHECKED:

SHEET NO.
M3C

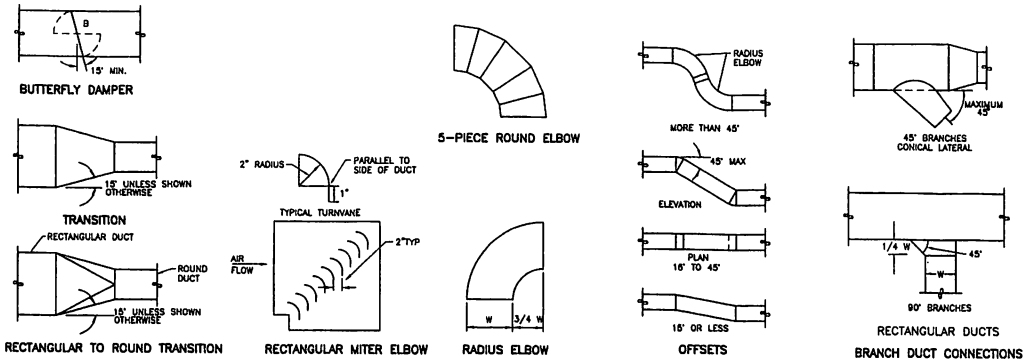

1 DUCT CONSTRUCTION DETAILS
NO SCALE

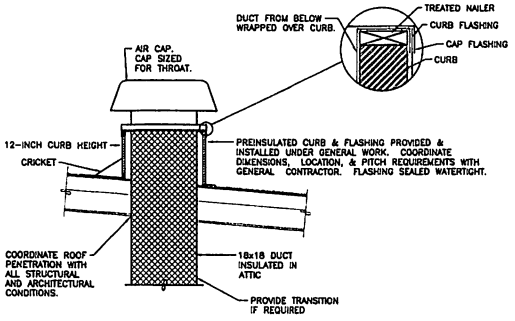

2 ROOF CAP DETAIL
NO SCALE

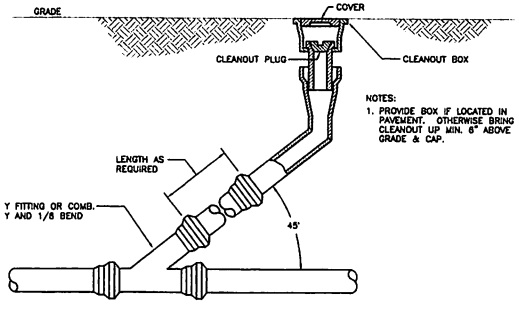

3 YARD CLEAN OUT DETAIL
NO SCALE

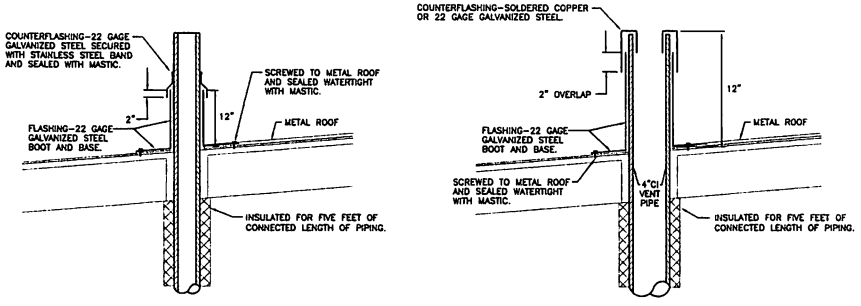

VENT PIPING LESS THAN 4-INCH SIZE

4-INCH OR LARGER VENT

4 VENT THROUGH ROOF DETAILS
NO SCALE

MURRAY & ASSOCIATES, P. C.
CONSULTING ENGINEERS
P O BOX 21081 JUNEAU, ALASKA 99802
TEL: 907 780-6151 FAX: 907 780-6152

11 X 17 SHEET IS HALF SCALE

MRV ARCHITECT
1420 GLACIER AVE.
JUNEAU, AK 998
907-586-1371
FAX 907-463-554
mrv@mrvarchitects.

WRANGELL CARVING SHED

Wrangell Cooperative Association and Alaska Native Sisterhood

CONSTRUCTION DOCUMENTS

SHEET TITLE:
DETAILS

DATE: SEP. 10,
SCALE:
DRAWN:
CHECKED:

SHEET NO.
M3C

GORMAN ENGINEERS
800 GLACIER AVENUE, SUITE E
JUNEAU, ALASKA 99801-1852
PHONE: 463-6721 FAX: 586-6216
e-mail: pgorman@gci.net

STATE OF ALASKA 49TH Patrick Gorman EE-7918 REGISTERED PROFESSIONAL ENGINEER

LEGEND

	CONDUIT w/#2 AWG CONDUCTORS, UON. SLASHES DENOTE QUANTITY OF CONDUCTORS IF NOT TWO. SHARED NEUTRALS SHALL BE #2 AWG.
	DUPLEX RECEPTACLE: 18" AFF, UON
	RAISED HEIGHT RECEPTACLE: 48" AFF, UON
	DOUBLE DUPLEX RECEPTACLE: 18" AFF, UON
S	SINGLE POLE SWITCH: 48" AFF, UON
S3,4	THREE or FOUR-WAY SWITCH: 48" AFF, UON
SP	PILOT LIGHT SWITCH: 48" AFF, UON
SO	OCCUPANCY SENSOR, WALLBOX MOUNTED
	FLUORESCENT SURFACE WRAP
	WALL MOUNT FLUORESCENT
	DOWNLIGHT
	EMERGENCY LIGHT
	WALL MOUNT LIGHT
	WALL MOUNT EXIT SIGN/LIGHT
	JUNCTION BOX
	MOTOR CONNECTION: BLANK = NO STARTER s = MANUAL STARTER m = MAGNETIC STARTER
F	DISCONNECT SWITCH: F = FUSED
Sm	MANUAL STARTER
	MAGNETIC STARTER
	PANELBOARD
500	ELECTRIC COVE HEATER, WATTAGE NOTED
	TELEPHONE/DATA RECEPTACLE: 18" AFF, UON
	TELEVISION RECEPTACLE: 18" AFF, UON
FACP	FIRE ALARM CONTROL PANEL
	FLOW SWITCH
	TAMPER SWITCH
	MANUAL PULL STATION
	SMOKE DETECTOR
	HEAT DETECTOR, 135° UON
	HORN/STROBE NOTIFICATION APPLIANCE
WP	WEATHERPROOF HORN NOTIFICATION APPLIANCE
	STROBE NOTIFICATION APPLIANCE
AC	AIR COMPRESSOR
AFF	ABOVE FINISHED FLOOR
ECH	ELECTRIC COVE HEATER
EF	EXHAUST FAN
EHC	ELECTRIC HEATING COIL
ELC	EXTERIOR LIGHTING CONTROLS
Em	EQUIP WITH EMERGENCY BALLAST
EUH	ELECTRIC UNIT HEATER
FACP	FIRE ALARM CONTROL PANEL
GFCI	GROUND FAULT CIRCUIT INTERRUPTER
GND	GROUND
HC	HEATING COIL
HOA	HAND-OFF-AUTO SWITCH
HRV	HEAT RECOVERY VENTILATOR
HWT	HOT WATER TANK
IDC	INITIATION DEVICE CIRCUIT
LC	LIGHTING CONTACTOR
LTG	LIGHTING
MDP	MAIN DISTRIBUTION PANEL
NAC	NOTIFICATION APPLIANCE CIRCUIT
NS	NOT SWITCHED
PE	PHOTOELECTRIC CELL
REC	RECEPTACLE
TC	TIME CLOCK
TTB	TELEPHONE TERMINATION BOARD
UH	UNIT HEATER
UON	UNLESS OTHERWISE NOTED
WP	WEATHERPROOF

NOTES and SPECIFICATIONS

1. Provide all work as shown on the drawings and described in the specifications and notes for a complete and functional installation. Unless otherwise noted, all material shall be of new manufacture and of the manufacturer's standard construction. All material shall be approved by Underwriters Laboratories (UL) and so noted.
2. All work shall comply with the latest approved editions of:
   The National Electrical Code (NEC)
   The National Fire Protection Association Codes (NFPA)
   The International Building Code (IBC)
   The Uniform Federal Accessibility Standards (UFAS)
   All applicable Federal, State and Local regulations
3. Provide two sets of as-built drawings at project completion. Minimize and seal penetrations of the vapor barrier caused by the electrical installation. Label all panelboards, circuit breakers, junction boxes, controls, etc. Provide an accurate, typed circuit directory for each new and revised panelboard.
4. The contractor shall coordinate installation of the power, telephone and cable television services with the serving utilities and shall comply with their requirements. Power service shall be provided by the City of Wrangell Electrical Department to the service equipment. Contractor shall provide 200 ampere rated equipment with two (2) copper plated ground rods (10' x 3/4") and appropriate grounding electrode conductor (#2 copper). Bond any building steel, the cold water piping, grounding electrodes, ground bus and neutral conductor
5. Raceway systems shall be EMT for feeder, telephone and data circuits and rigid steel for the exposed service entrance. Schedule 80 PVC is acceptable for underground runs where permitted by the NEC and the local utilities.
6. All conductors shall be copper. Conductors in raceways shall have Type THHN/THWN insulation for inside work and Type XHHW-2 for exterior work. Types NM and MC cables are acceptable for interior work where approved by the local authority, the Owner and the NEC.
7. Boxes shall be steel with appropriate plaster rings. All wiring devices shall be specification grade, screw connected, white, with matching white nylon plates. Provide a manual or magnetic starter/disconnect (as shown or required) for all motor loads.
8. Provide an addressable fire alarm system including a control panel with battery backup, a digital communicator (auto dialer), manual pull stations, sprinkler flow and tamper switches, smoke and heat detectors, and notification appliances (horns/strobes, horns and strobes). Provide a dedicated telephone line to connect the communicator. Ensure the circuits feeding the Fire Alarm Control Panel is dedicated, marked in red, and equipped with a handle lock-off.
9. Provide telephone and data receptacles as shown. For each wall mounted receptacle provide a deep 4" square box, single gang plaster ring and a 3/4" conduit to the accessible attic space above the first floor or directly to the Telephone Termination Board (TTB). Provide CAT 6 cabling from each box to the TTB.
10. Total Connected Load for the facility is 55.8 kVA (232.5 Amperes).
    Actual Demand Load for the facility is 42.8 kVA (178.3 Amperes).

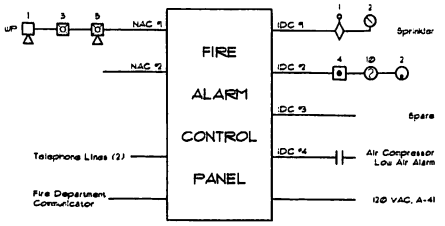

FIRE ALARM RISER DIAGRAM

NO SCALE

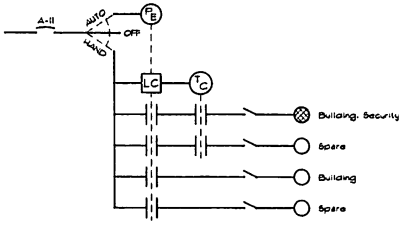

EXTERIOR LIGHTING CONTROLS

NO SCALE

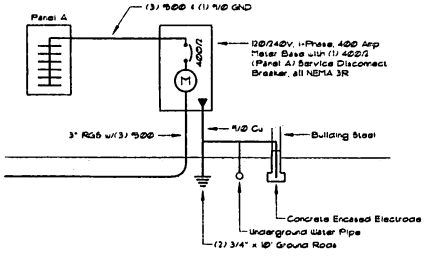

SINGLE LINE DIAGRAM

NO SCALE

11 X 17 SHEET IS HALF SCALE

MRV ARCHI
1420 GLACIER A
JUNEAU, AK
907-586-1
FAX 907-46
mrv@mrvarchit

WRANGELL CARVING SHED
Wrangell Cooperative Association and Alaska Native Sisterhood

SHEET TITLE:
LEGEND, I
SINGLE LI
DIAGRAMS

DATE: NOVEMBER
SCALE:
DRAWN:
CHECKED:

SHEET NO.
E1

SHEET NOTES

1. Provide connection to all power and mechanical devices and equipment shown. Include starters, as noted, associated with mechanical equipment. Refer to the Panel Schedule on Sheet E600 for circuiting.
2. Pull conductors for the circuits as shown in the Panel Schedule. All runs shall include a single and separate equipment grounding conductor, sized per the NEC.
3. Coordinate the installation and connection of all mechanical, architectural, and Owner-furnished equipment and receptacles with the other trades, architectural drawings and manufacturer's requirements. Ensure the proper mounting heights, electrical configurations and clearances with other equipment and terminations.
4. All convenience receptacles on the exterior and in the Restrooms and Carving Room shall be GFI.

GORMAN ENGINEERS
800 GLACIER AVENUE, SUITE E
JUNEAU, ALASKA 99801-1852
PHONE: 463-6721 FAX: 586-6216
e-mail: pgorman@gci.net

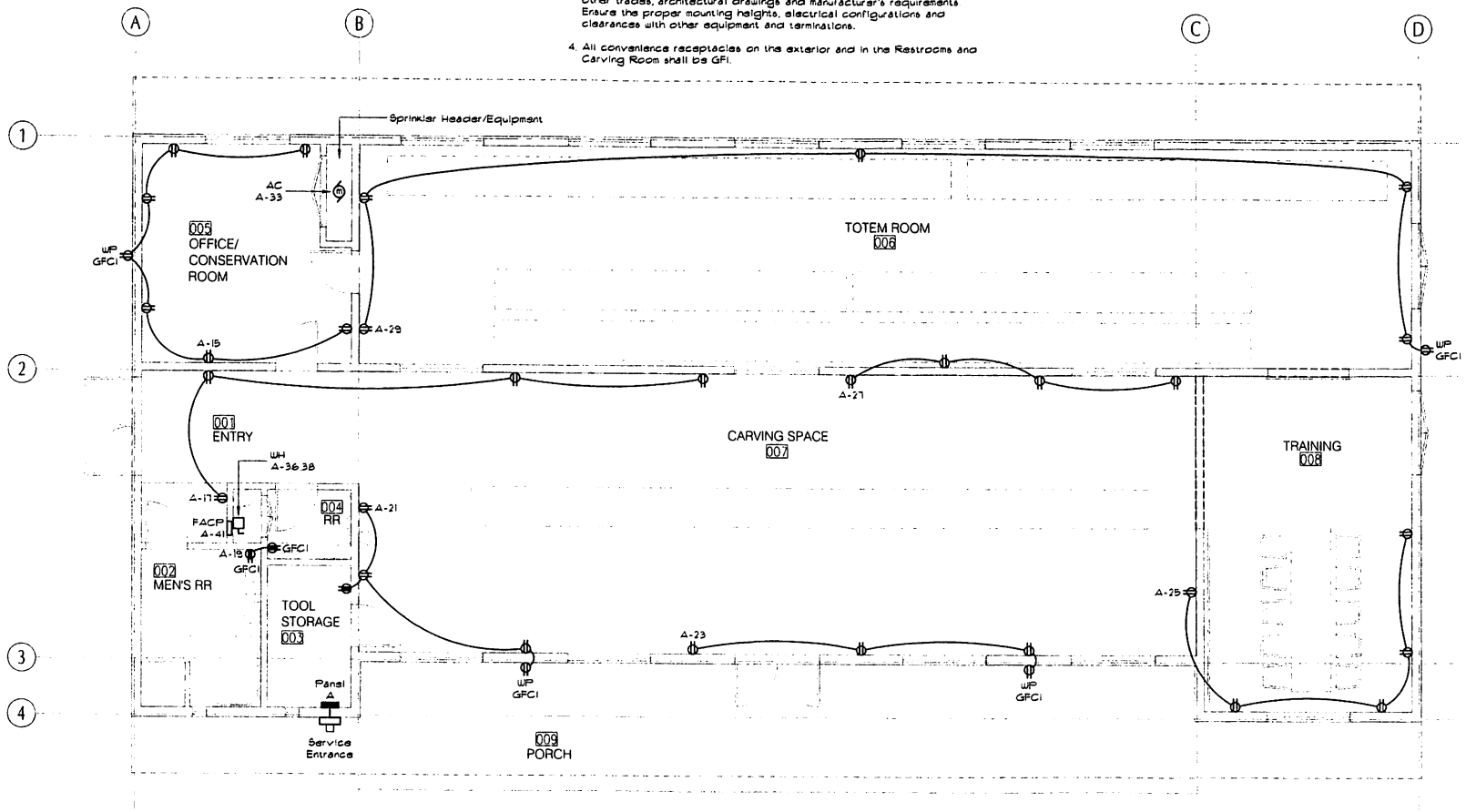

NORTH

POWER PLAN

SCALE: 0 2' 4' 8'

11 x 17 SHEET IS HALF SCALE

MRV ARCHI
1420 GLACIER A
JUNEAU, AK
907-586-1
FAX 907-46
mrv@mrvarchi

WRANGELL CARVING SHED

Wrangell Cooperative Association and Alaska Native Sisterhood

SHEET TITLE:
POWER PI

DATE: NOVEMBER
SCALE:
DRAWN:
CHECKED:

SHEET NO
E2

SHEET NOTES

1. Provide all lighting, control devices and equipment as shown on this sheet. Include powered exit signs, emergency ballasts and emergency lights.
2. Refer to the exterior lighting control (ELC) schematic on E100 for connection of the exterior luminaires, photoelectric cell and control switches.
3. Pull conductors for the circuits as shown in the Panel Schedule on Sheet E600. All runs shall include a single and separate equipment grounding conductor, sized per the NEC.
4. Provide multi-level switching in this area. One switch shall control the outboard lamps in all luminaires and one switch shall control the inboard or center lamps in all luminaires.
5. Mount these switches to avoid the adjacent sliding doors.

GORMAN ENGINEERS
800 GLACIER AVENUE, SUITE E
JUNEAU, ALASKA 99801-1852
PHONE: 463-6721 FAX: 586-6216
e-mail: pgorman@gci.net

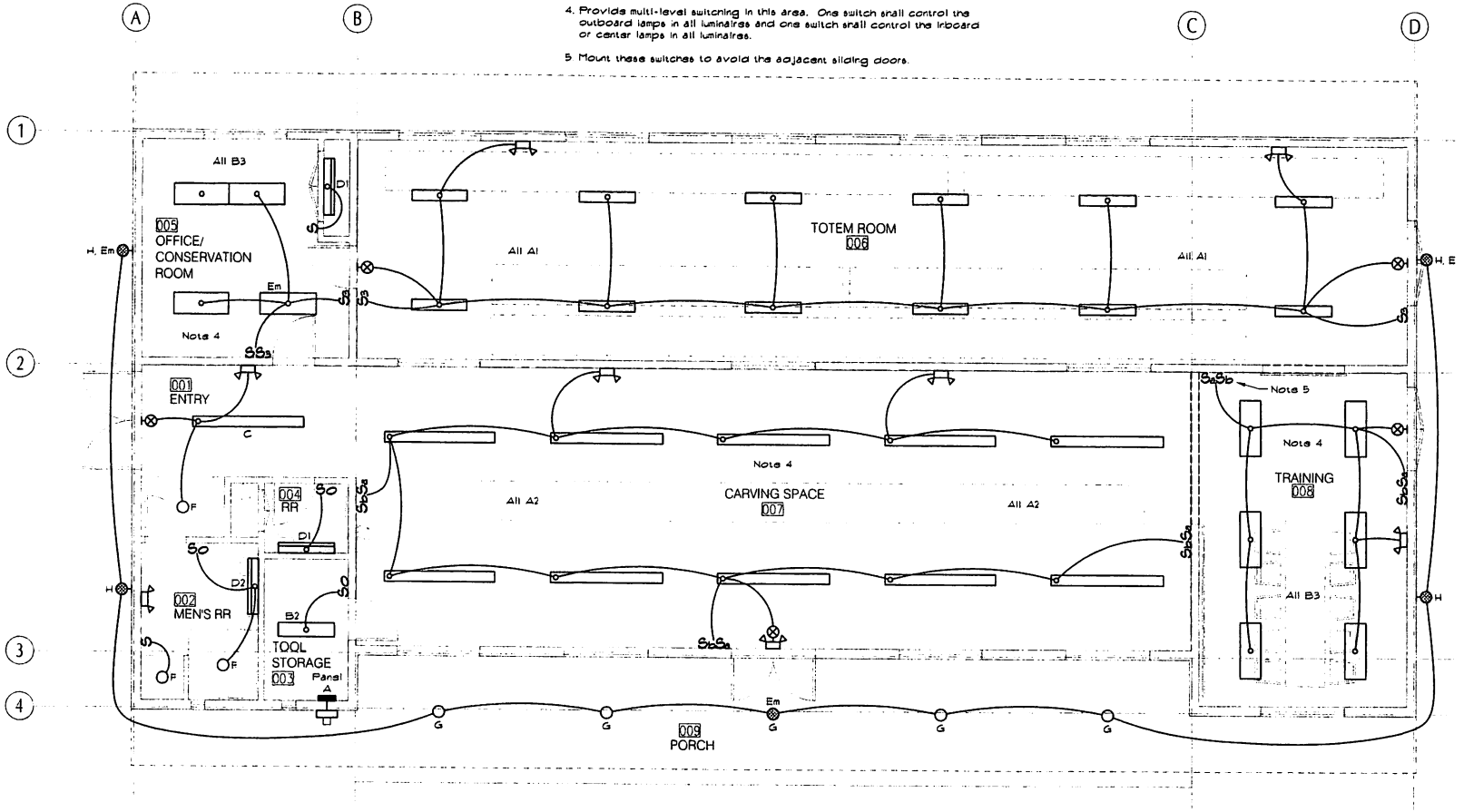

LIGHTING PLAN

NORTH

SCALE: 0 2' 4' 8'

11 X 17 SHEET IS HALF SCALE

MRV ARCHI
1420 GLACIER A
JUNEAU, AK
907-586-1
FAX 907-46
mrv@mrvarchit

WRANGELL CARVING SHED

Wrangell Cooperative Association and Alaska Native Sisterhood

SHEET TITLE:
LIGHTING

DATE: NOVEMBER
SCALE:
DRAWN:
CHECKED:

SHEET NO
E3

SHEET NOTES

1. Provide connection of all the fire alarm system components to the Fire Alarm Control Panel. Refer to the Riser Diagram on sheet E100 for configuration and circuiting.
2. Provide telephone and data jacks and receptacles as shown. For each wall mounted receptacle provide a deep 4" square box, single gang plaster ring and a 3/4" conduit to the IT Room. Provide CAT 6 cabling from each box to the Telephone Termination Board (TTB). Test, label and terminate each cable as required.
3. Provide a single 3/4" conduit for the cable television receptacles to the TTB. Provide coaxial cable, compatible with the serving utility, from each receptacle to the TTB.

GORMAN ENGINEERS
800 GLACIER AVENUE, SUITE E
JUNEAU, ALASKA 99801-1852
PHONE: 463-6721 FAX: 586-6216
e-mail: pgorman@gci.net

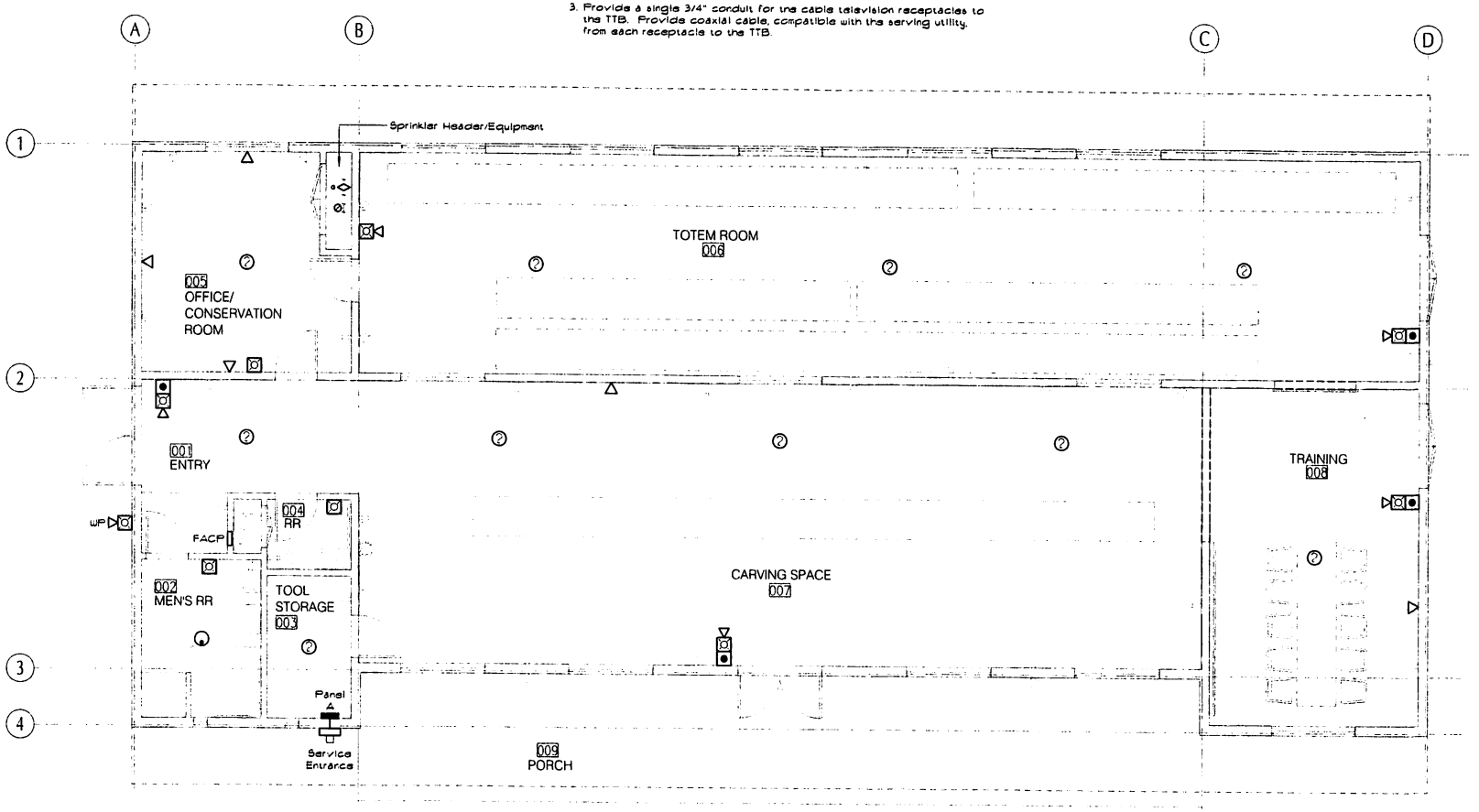

NORTH

SIGNAL PLAN

SCALE: 0 2' 4' 8'

11 X 17 SHEET IS HALF SCALE

MRV ARCHI
1420 GLACIER A
JUNEAU, AK
907-586-1
FAX 907-46
mrv@mrvarchit

WRANGELL CARVING SHED
Wrangell Cooperative Association and Alaska Native Sisterhood

SHEET TITLE:
SIGNAL PI

DATE: NOVEMBER
SCALE:
DRAWN:
CHECKED:

SHEET NO
E4

SHEET NOTES

1. Provide connection to all electrical heating equipment and controls as shown. Include wall mounted thermostats, as noted, associated with heating equipment. Refer to the Panel Schedule on Sheet E600 for circuiting.
2. Pull conductors for the circuits as shown in the Panel Schedule. All runs shall include a single and separate equipment grounding conductor, sized per the NEC.
3. Coordinate the installation and connection of all electric heaters and controls with the other trades and the architectural drawings. Ensure the proper mounting heights, electrical configurations and clearances with other equipment and terminations.

GORMAN ENGINEERS
800 GLACIER AVENUE, SUITE E
JUNEAU, ALASKA 99801-1852
PHONE: 463-6721 FAX: 586-6216
e-mail: pgorman@gci.net

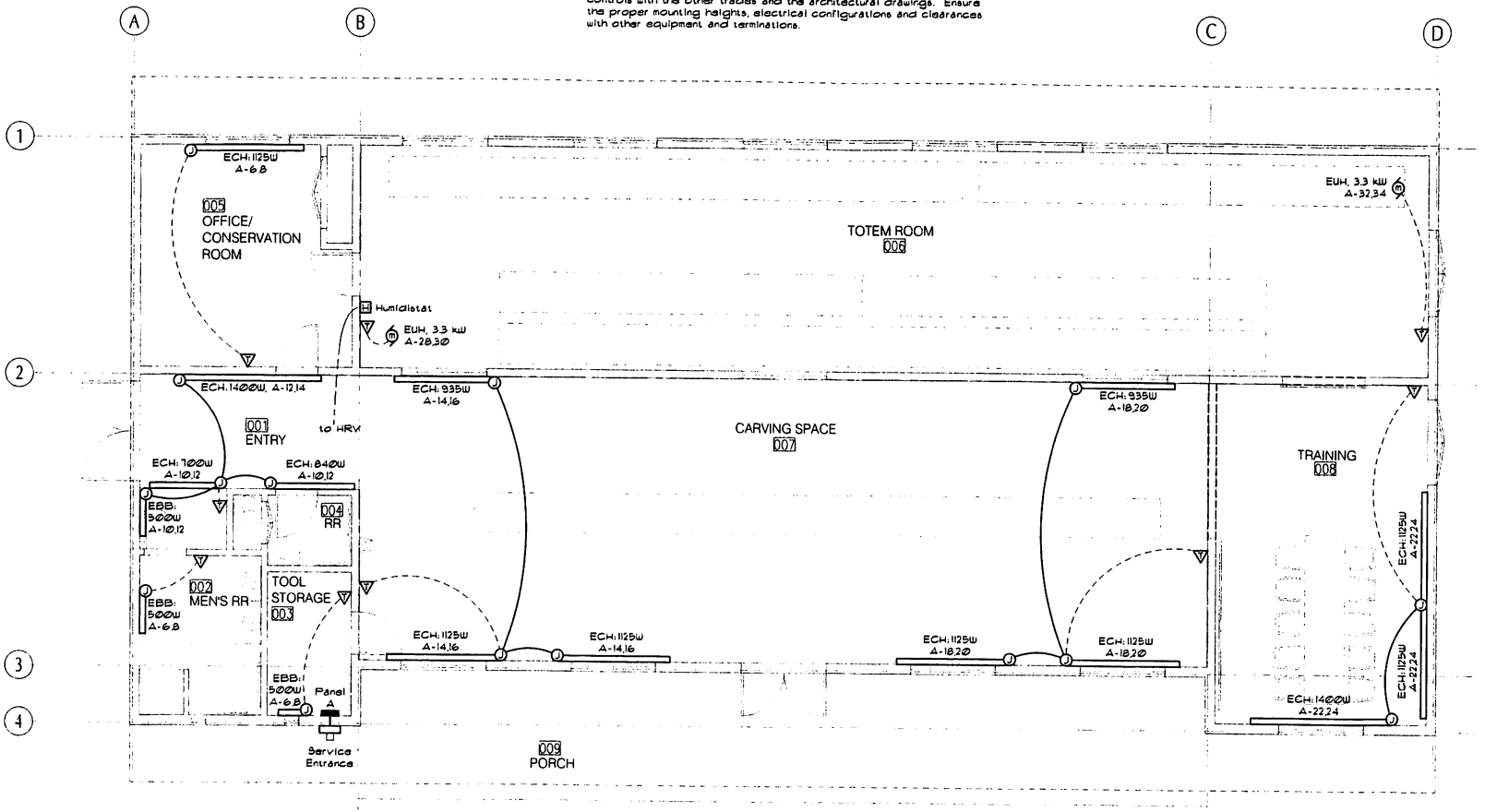

NORTH

HEATING PLAN

SCALE: 0 2' 4' 8'

11 x 17 SHEET IS HALF SCALE

MRV ARCHI
1420 GLACIER A
JUNEAU, AK
907-586-1
FAX 907-46
mrv@mrvarchit

WRANGELL CARVING SHED

Wrangell Cooperative Association and Alaska Native Sisterhood

SHEET TITLE:
HEATING

DATE: NOVEMBER
SCALE:
DRAWN:
CHECKED:

SHEET NO
E5

GORMAN ENGINEERS
800 GLACIER AVENUE, SUITE E
JUNEAU, ALASKA 99801-1852
PHONE: 463-6721 FAX: 586-6216
e-mail: pgorman@gci.net

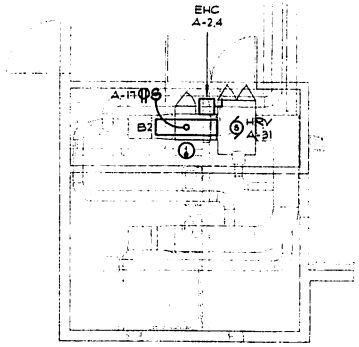

MEZZANINE PLAN

SCALE: 0 2' 4' 8'

HEATING EQUIPMENT SCHEDULE

NAME	DESCRIPTION	MANUFACTURER	MODEL / SERIES	WATTAGE	LENGTH	CONTROL
EBB	Electric Hydronic Baseboard Heater	Q-Mark	HBB504	500	28"	Wall-mount Thermostat
ECH	Electric Cove Heater	King Electric	KCV2407	700	59"	Wall-mount Thermostat
			KCV2409	840	71"	Wall-mount Thermostat
			KCV2410	935	83"	Wall-mount Thermostat
			KCV2412	1,125	94"	Wall-mount Thermostat
			KCV2415	1,400	118"	Wall-mount Thermostat
EUH	Electric Unit Heater	Aitken	AUH-320-SA	3,300		Wall-mount Thermostat

Panel A

SIZE: 400 amps | VOLTS/PHASE: 120/240, 1P, 3W | MAIN: LUGS ONLY | MOUNT / LOCATION: SURFACE / TOOL STORAGE | SHORT CKT: 15,000 A

CKT #	WIRE Qty/ Size	CIRCUIT DESCRIPTION	BRKR Amp/ Pole	CKT	K A	V	A B	CKT	BRKR Amp/ Pole	CIRCUIT DESCRIPTION	WIRE Qty/ Size	CKT #
1	2/#12	LTG - Entry, Office, Restrooms, Storage	20/1	1.2	6.2			5.0	60/2	Electric Heating Coil (HRV), 10 kW	3/#6	2
3	2/#12	LTG - Totem Storage	20/1	1.2			6.2	5.0	--	---	--	4
5	2/#12	LTG - Carving	20/1	1.6	2.7			1.1	20/2	Electric Cove & BB Htrs - Office, RR, Tool	2/#12	6
7	2/#12	LTG - Carving	20/1	1.2			2.3	1.1	--	1 @ 1125W, 2 @ 500W	--	8
9	2/#12	LTG - Training	20/1	1.0	2.7			1.7	20/2	Electric Cove Heaters - Entry	2/#12	10
11	2/#12	LTG - Exterior	20/1	1.0			2.7	1.7	--	1@1400W, 1@840W, 1@700W, 1@500W	--	12
13		Spare	20/1		1.8			1.8	20/2	Electric Cove Heaters - Carving North	2/#12	14
15	2/#12	REC - Office, Exterior	20/1	1.4			3.0	1.6	--	2 @ 1125W, 1 @ 935W	--	16
17	2/#12	REC - Entry, Carving E, Totem W, Mech	20/1	1.0	2.6			1.6	20/2	Electric Cove Heaters - Carving South	2/#12	18
19	2/#12	REC - Restrooms	20/1	1.5			3.1	1.6	--	2 @ 1125W, 1 @ 935W	--	20
21	2/#12	REC - Carving NW, Tools, Exterior	20/1	1.0	2.8			1.8	20/2	Electric Cove Heaters - Training	2/#12	22
23	2/#12	REC - Carving W, Exterior	20/1	0.8			2.6	1.8	--	1 @ 1400W, 2 @ 1125W	--	24
25	2/#12	REC - Carving S, Training	20/1	1.0	2.7			1.7	20/2	Electric Unit Heater, 3.3 kW - Totem North	2/#12	26
27	2/#12	REC - Carving East, Totem Storage	20/1	0.8			2.5	1.7	--	---	--	28
29	2/#12	REC - Totem Storage, Exterior	20/1	1.2	2.9			1.7	20/2	Electric Unit Heater, 3.3 kW - Totem South	2/#12	30
31	2/#12	Heat Recovery Ventilator, HRV-1	20/1	1.0			2.7	1.7	--	---	--	32
33	2/#12	Air Compressor	20/1	1.2	3.5			2.3	30/2	Water Heater	2/#10	34
35		Spare	20/1				2.3	2.3	--	---	--	36
37		Spare	20/1		0.0							38
39							0.0					40
41	2/#12	Fire Alarm Control Panel	20/1	0.5	0.5							42
		TOTAL CONNECTED LOAD (kVA):	55.6		28.4		27.4			ACTUAL DEMAND LOAD (kVA):	42.8	

LUMINAIRE SCHEDULE

TYPE	DESCRIPTION	MANUFACTURER	LAMP(S)	REMARKS
A1 A2	Fluorescent heavy-duty industrial w/20% uplight parabolic reflector, steel body, high-gloss baked white enamel finish, full-depth end plates, wire guards, electronic ballasts	Lithonia PV 232 GEB10PS PCEP WGAFPV	(2) F32T8/SP41/ECO/C	A2's are tandem-mounted A1's. Electronic ballasts. Surface mount A1's. Chain hang A2's at 9'-0" AFF. Split switch A2's where/as noted. Equip with emergency ballast as noted.
B2 B3	Fluorescent surface modular with wraparound flat bottom low brightness high impact acrylic reflector, electronic ballast	Lithonia AW 2(3) 32 AR GEB10PS	(2), (3) F32T8/SP41/ECO/C	Electronic ballasts. Split switch B3's where noted. Equip with emergency ballast as noted.
C	Fluorescent indirect/direct pendant with standard diffuser, steel housing, die-cast end caps, parallel white steel baffles, electronic ballast, dust cover	Peerless "Cerra 10" 10CRM4 232 WHR SPR OPD SBL 120 GEB10 DU SCEP	(2) F32T8/SP41/ECO/C	Electronic ballasts. Finish by Architect. Mount at 11'-0" AFF
D1 D2	Fluorescent wall mount with brushed aluminum body, acrylic prismatic diffusers, brushed aluminum end caps, electronic ballast	Lithonia W 1(2)2 32 MVOLT GEB10RS AE	(1), (2) F32T8 SP35/ECO/C	Electronic ballast. Mount above mirror in Restrooms.
E	Emergency light with white high impact plastic housing, polycarbonate domes, adjustable lamps	Lithonia ELM2	(2) 5.4W Krypton	
F	6" housing with air-tight construction, IC rated, LED module, regressed lens, white die-cast baffle and trim ring	Halo H750ICAT, ML706830 & 492PS06	(1) 13.8W LED module	Energy Star rated
G	6" compact fluorescent downlight with clear semi-specular low incescent reflector, horizontal lamp, tempered glass prismatic lens, electronic ballast	Lithonia AF 1/32TRT 8AR T73	(1) F32TBX 841/A/ECO	Electronic ballast. Equip with emergency ballast as noted
H	Metal halide wallpack with full cutoff wide-throw optics, corrosion resistant die-cast aluminum housing, high PF ballast, tempered glass lens, full cutoff visor	Lithonia TWR1C 100M FCV	(1) 100W Metal Halide	Finish by Architect
X	Contemporary emergency exit light with die-cast aluminum housing, brushed aluminum faceplate, stencil face, nickel cadmium battery, LED lamps	Lithonia LQC G EL N	LED's	Mount 96" above finished floor, UON

11 X 17 SHEET IS HALF SCALE

MRV ARCHI
1420 GLACIER A
JUNEAU, AK
907-586-1
FAX 907-46
mrv@mrvarchit

WRANGELL CARVING SHED
Wrangell Cooperative Association and Alaska Native Sisterhood

SHEET TITLE.
SCHEDULE
MEZZANIN
PLAN

DATE: NOVEMBER
SCALE:
DRAWN:
CHECKED:

SHEET NO
E6